ORION 4300PRO

MODEL

SERVICE MANUAL

NICAM 4300

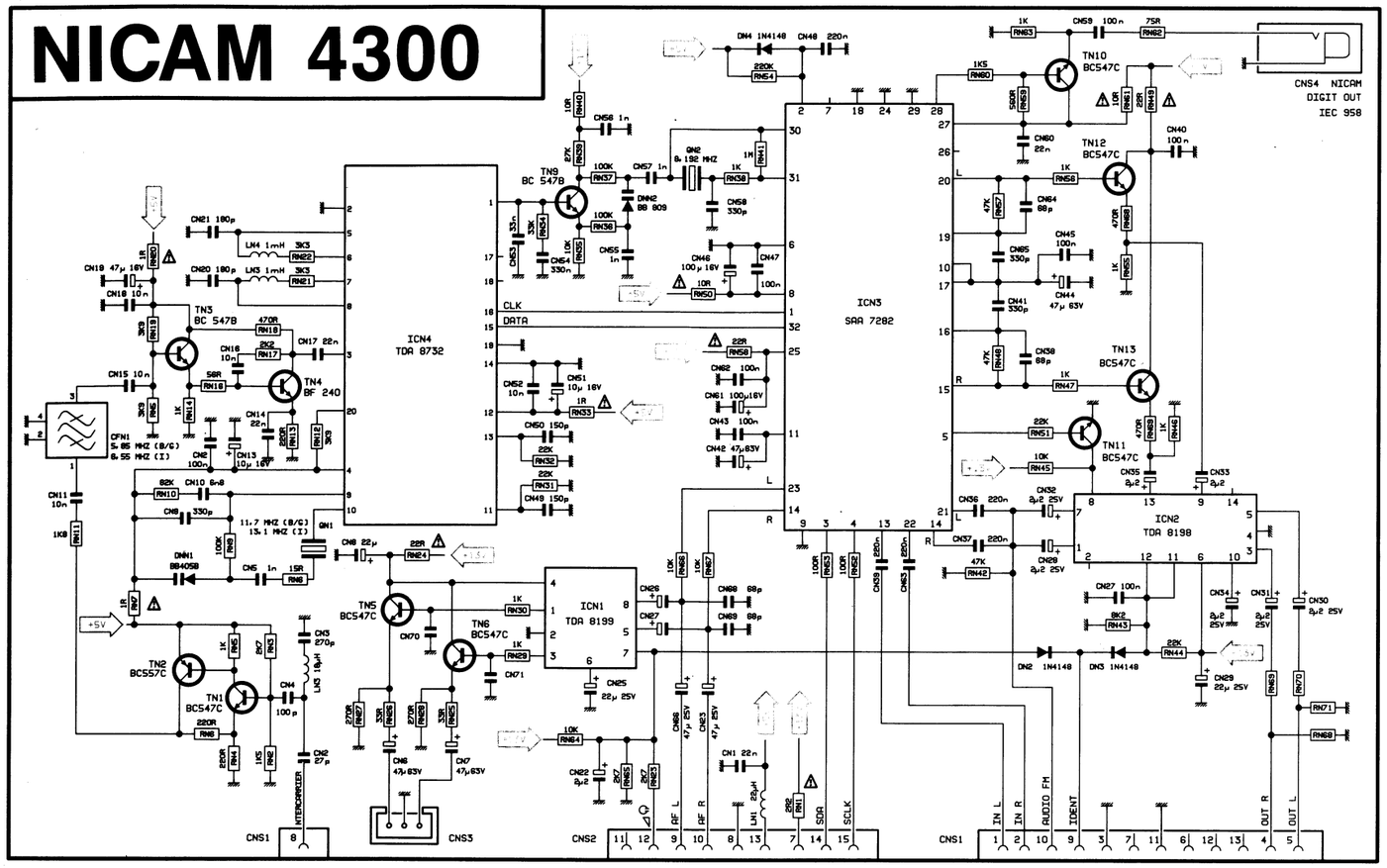

STEREO 4300

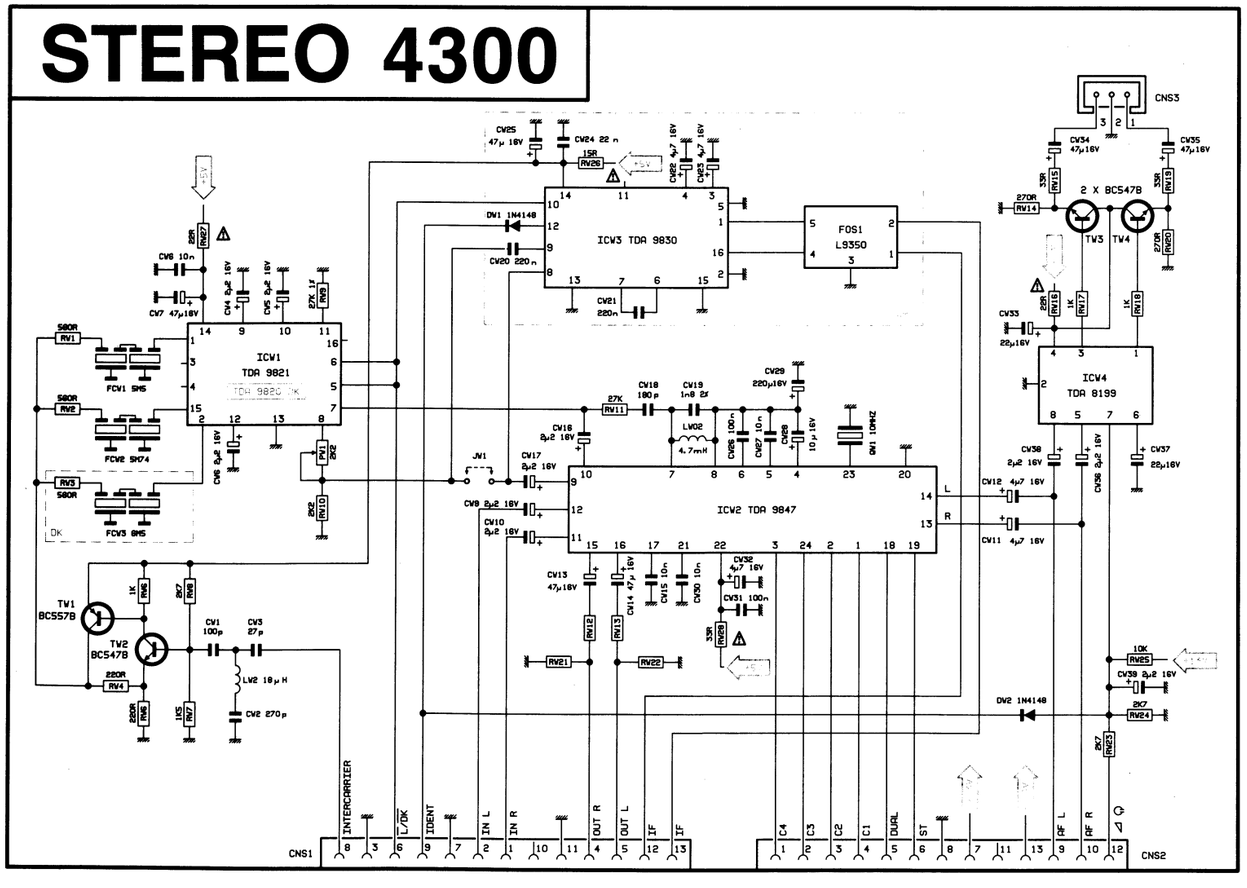

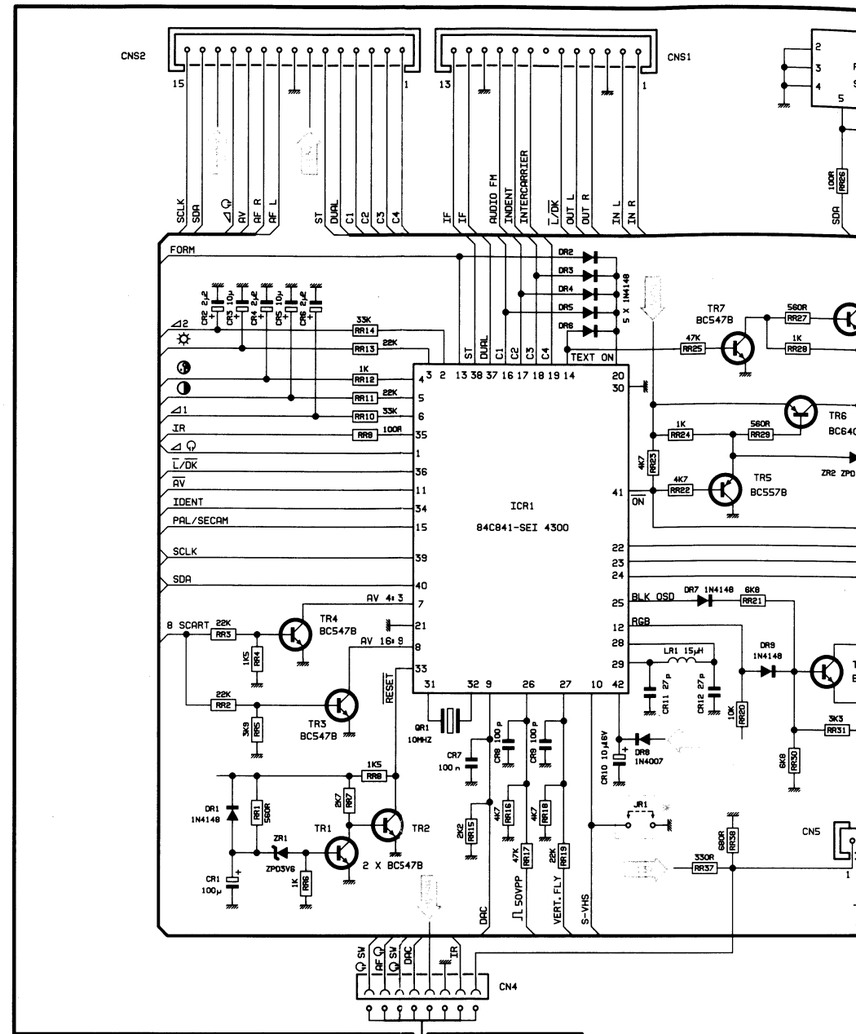

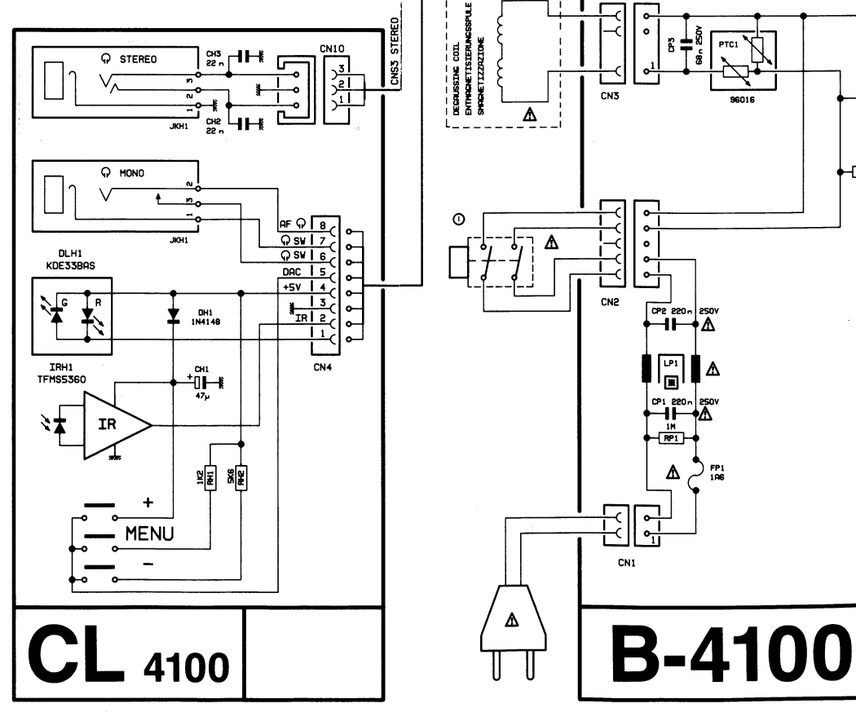

CL 4100

B-4100

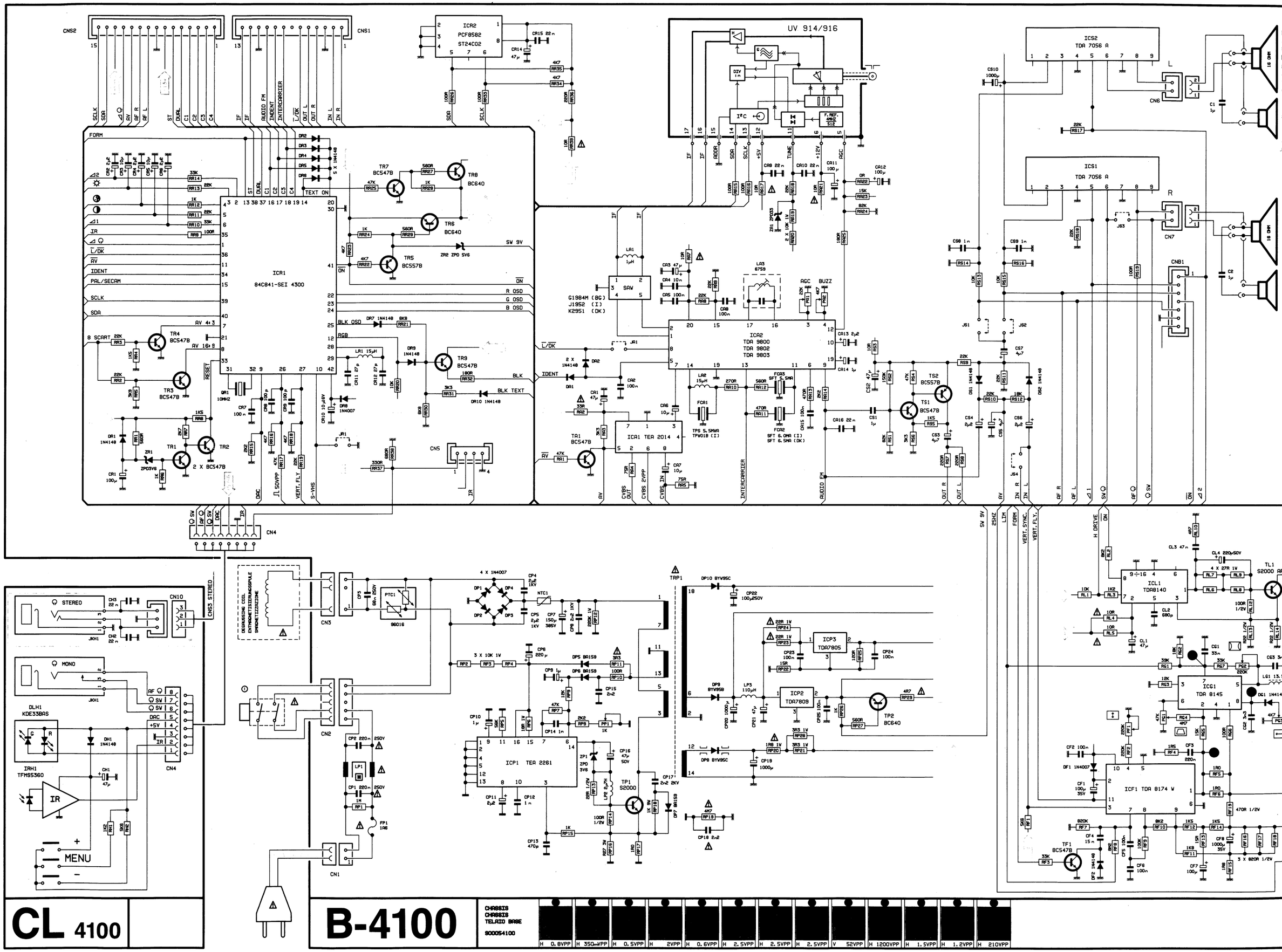

CL 4100
B-4100
CHASSIS
CHASSIS
TELAIO BASE
900054100
ICR1
84C841-SEI 4300
ICR2
PCF8582
ST24C02
UV 914/916
ICS2
TDA 7056 A
ICS1
TDA 7056 A
ICA2
TDA 9800
TDA 9802
TDA 9803
ICA1 TEA 2014
ICP1 TEA 2261
ICP2
TDA7809
ICP3
TDA7805
ICL1
TDA8140
ICG1
TDA 8145
ICF1 TDA 8174 W
TRP1
TP1
S2000
TP2
BC640
TR1
2 X BC547B
TR2
TR3
BC547B
TR4
BC547B
TR5
BC557B
TR6
BC640
TR7
BC547B
TR8
BC640
TR9
BC547B
TS1
BC547B
TS2
BC557B
TA1
BC547B
TF1
BC547B
CN1
CN2
CN3
CN4
CN5
CN6
CN7
CNB1
CNS1
CNS2
CNS3 STEREO
CN10
DLH1
KDE33BAS
IRH1
TFMS5360
MENU

Chassis Professional 4300

ICS2 TDA 7056 A

ICS1 TDA 7056 A

ICC1 STV 2102 (PAL) STV 2110 (PAL/SECAM)

ICL1 TDA8140

ICG1 TDA 8145

ICF1 TDA 8174 W

TL1 S2000 AF

TRL1

TC1 BC557B

TC2 BC547B

TC3 BC547B

TC4 BC547B

TC5 BC547B

TC6 BC547B

TF1 BC547B

TF2 BC547B

TV1 BC 557-B

CNSV

CNT2

CNT1

CN6

CN7

CNB1

CN9

CN9

CNV7

CNV8

CNV8

CNV7

HEATER

DEFLECTION YOKE
ABLENKEINHEIT
GIOGO

CI-4300

CRT CONN.
BILDROHRPL.
ZOCCOLO CINESCOPIO

8000874300

H 75VPP

H 75VPP

H 75VPP

H 1.2VPP

H 210VPP

EMC COMPONENT
EMC BAUTEIL
COMPOSANTE EMC
PIECE EMC

SAFETY PART
WHEN REPAIRING, USE ORIGINAL PARTS ONLY.

SICHERHEITSBAUTEIL
BEI ERSATZ NUR ORIGINALTEIL VERWENDEN.

COMPONENTE DI SICUREZZA
IN CASO DI SOSTITUZIONE UTILIZZARE
SOLO COMPONENTI ORIGINALI.

PIECE DE SECURITE
N' UTILISER QUE LES PIECES D' ORIGINES.

COMPONENTE DE SEGURIDAD
UTILIZAR SOLO COMPONENTES ORIGINALES.

SUBJECT TO MODIFICATION
ÄNDERUNGEN VORBEHALTEN
CON RISERVA DI MODIFICHE

S095414300

IMPORTANT WARNING
When the back panel is removed, high voltage parts are exposed, so any adjustment must be carried out by specialized personnel only. Before performing any of the following adjustments, switch on the set for about ten minutes, on average brightness and without the aerial attached («snow effect» only).

- Power Supply
Switch power supply to 220 V.
With contrast and brightness at the minimum, adjust PP1 to 148 V ± 0,5 V at CP22 terminals.

- Adjustment of picture

Horizontal adjustment
Use PC1 for correct adjustment of picture's horizontal position.

Picture width
Use PG3 to adjust picture width

Crosswise Correction
Use PG2 and PG1 for picture's best geometry.

Picture Height
Use PF1 to adjust.

- Focusing
Adjust picture focus with the contrast near to maximum.

- Adjusting picture tube tension
Set contrast and brightness to the minimum. Measure direct current voltage at the three picture-tube cathodes and adjust the G2 screen grid so that the cathode voltage at its higest value is 175 V. Send a «white page» signal to the aerial. Set brightness and contrast to maximum and adjust PV1 and PV2 so that all colour shades disappear.

WICHTIGER HINWEIS
Nach der Entfernung des Rückendeckels des Gerätes werden Teile zugänglich, die auch Hochspannungen besitzen. Infolgesdessen darf jede Reparatur ausschliessslich durch Fachpersonal durchgeführt werden.
Vor der Durchführung der nachstehend beschriebenen Einstellungen soll das Gerät ca. 10 Minuten lang eingeschaltet werden, z.zw. mit mässiger Bildschirmbeleuchtung und ohne Antennesignal (lediglich «Schnee-effekt»).

- Netzteil
Die Netzspannung auf 220 V einstellen.
Danach in Betriebszustand - mit Kontrast und Helligkeit auf Mindestwert - PP1 auf 148 V ± 0,5 V an den Enden von CP22 einstellen.

- Einstellung der Bildgeometrie

Horizontallage
PC1 für die korrekte Horizontallage des Bildes einstellen.

Horizontalamplitude
Die Einstellung mit PG3 für die einwandfreie Horizontalamplitude vornehmen.

Ost-West-Korrektur
Die Einstellung mit PG2 (Kissen) und PG1 (Trapez) für eine bessere Bildgeometrie durchführen.

Vertikalamplitude
Die Einstellung mit PF1 durchführen.

- Fokussierung
Bei auf nahezu Maximalwert eingestellten Kontrast die Einstellung für die bestmögliche Bildfokussierung durchführen.

Einstellung des Arbeitspunktes der Bildröhre
Kontrast und Helligkeit auf Mindestwert einstellen. Die Gleichspannung der drei Kathoden der Bildröhre messen und den Schirmgitterregler G2 so eistellen, dass die beim Maximalwert festgestellte Spannung 175 V beträgt.
In die Antenne ein «weisse Seite-Signal» einschalten. Helligkeit und Kontrast nahezu auf Maximalwert einstellen und PV1 sowie PV2 so einstellen, dass jede Farbabtönung verschwindet.

AVVERTENZA IMPORTANTE
La rimozione dello schienale rende accessibili parti sottoposte a tensioni anche elevate, ogni intervento dovrà perciò essere effettuato esclusivamente da personale specializzato. Prima dell'esecuzione delle regolazioni di seguito descritte l'apparecchio deve essere acceso per una decina di minuti con schermo mediamente illuminato senza segnale in antenna (solo «effetto neve»).

- Alimentatore
Regolare la tensione di rete su 220 V. Regolare quindi, in condizioni di funzionamento, con contrasto e luminosità al minimo, PP1 per 148 V ± 0,5 V ai capi di CP22.

- Regolazione della geometria dell'immagine

Posizione orizzontale
Regolare PC1 per una corretta posizione orizzontale dell'immagine.

Ampiezza orizzontale
Regolare con PG3 per la corretta ampiezza orizzontale.

- Correzione Est-Ovest
Regolare con PG2 (cuscino) e PG1 (trapezio) per la migliore geometria dell'immagine.

Ampiezza verticale
Regolare con PF1

- Focalizzazione
Con il contrasto prossimo al massimo regolare per la migliore focalizzazione dell'immagine.

- Regolazione punto di lavoro del cinescopio
Regolare contrasto e luminosità al minimo. Misurare la tensione continua dei tre catodi del cinescopio e regolare il potenziometro di griglia schermo G2 in modo che la tensione del catodo riscontrato a valore più elevato sia di 175 V
Inserire in antenna un segnale a «pagina bianca». Portare luminosità e contrasto prossimi al massimo e regolare PV1 e PV2 in modo che scompaia ogni sfumatura di colore.

RECOMANDATIONS IMPORTANTES
Ne jamais enlever le panneau arrière de protection avant d'avoir débranché la fiche du secteur.
Cet appareil est conforme aux normes internationales de protection contre les radiations et les parasites radioélectriques.

- Alimentation
Régler la tension secteur sur 220 V.
En condition de fonctionnement avec contraste et luminosité au minimum, régler PP1 sur une tension de 148 V ± 0,5 V aux bornes de CP22.

- Réglage de la géométrie de l'image

Position horizontale
PC1 permet de régler correctement la position horizontale de l'image.

Largeur d'image
PG3 permet de régler correctement la largeur d'image.

Correction diagonale
PG2 et PG1 permettent le réglage de la géométrie de l'image.

Hauteur d'image
Régler avec PF1.

- Focalisation
Effectuer la mise au point avec le contraste presque au maximum.

- Réglage de la tension du tube
Régler le contraste et la luminosité au minimum. Mesurer la tension continue des trois cathodes du tube et régler la grille de l'écran G2 jusqu'à ce que l la tension de la cathode plus hant se stabilise sur 175 V. Envoyer à l'antenne un signal à «page blanche». Porter la luminosité et le contraste presque au maximum puis régler PV1 et PV2 de façon à éliminer toutes les nuances de couleur.

ADVERTENCIA IMPORTANTE
Al quitar la tapa posterior de protección deja accesibles partes con tensiones elevadas y peligrosas, por lo tanto solo debe ser llevado a cabo por personas especializadas. Antes de efectuar los ajustes y regulaciónes descritas a continuación debe permanecer el aparato en marcha unos diez minutos con lapantalla sin señal en antena (efecto nieve) y con el control de brillo en su posición media.

- Alimentación
Ajustar la tensión de red a 220 V.
Ajustar PP1 (situando los controles de contraste y brillo al minimo) hasta obtener 148 V ± 0,5 V en los terminales de CP22.

- Regulación de la geometria de la imagen

Centrado horizontal
Regular PC1 hasta obtener un correcto centrado de la imagen.

- Amplitud horizontal
Regular PG3 hasta obtener una correcta amplitud de la imagen.

Correccion est-oeste
Regular mediante PG2 (cojin) y PG1 (trapecio) hasta obtener una imagen correcta.

Altura de la imagen
Regularla mediante PF1 hasta obtener una altura correcta.

- Foco
Con el contraste casi al maximo ajustar el potenciometro de foco hasta la maxima focalización de la imagen.

- Ajuste del punto de trabajo del tubo de imagen
Regular el contraste y el brillo al minimo. Medir la tensión continua de los tres catodos del tubo de imagen y ajustar el potenciometro de G2 de manera que la tensión del cátodo mas elevada sea de 175 V.
Conectar a la toma de antena una señal generador modulado, para obtener una «Pantalla blanca».
Regular el brillo y el contraste, casi al máximo y ajustar PV1 y PV2 hasta que desaparezca todo matiz de color.

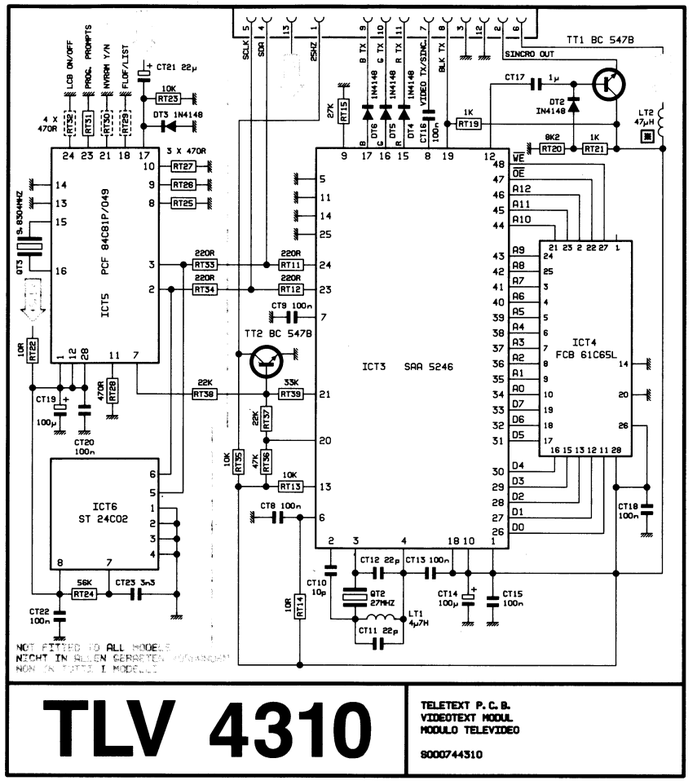

TLV 4310

TELETEXT P. C. B.
VIDEOTEXT MODUL
MODULO TELEVIDEO

9000744310

AM 4300

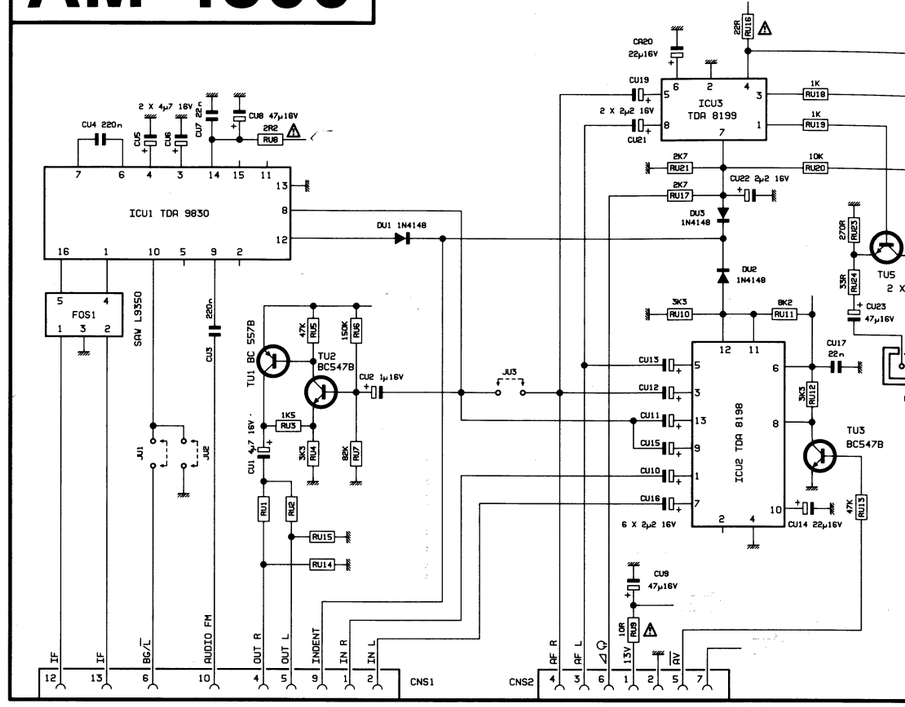

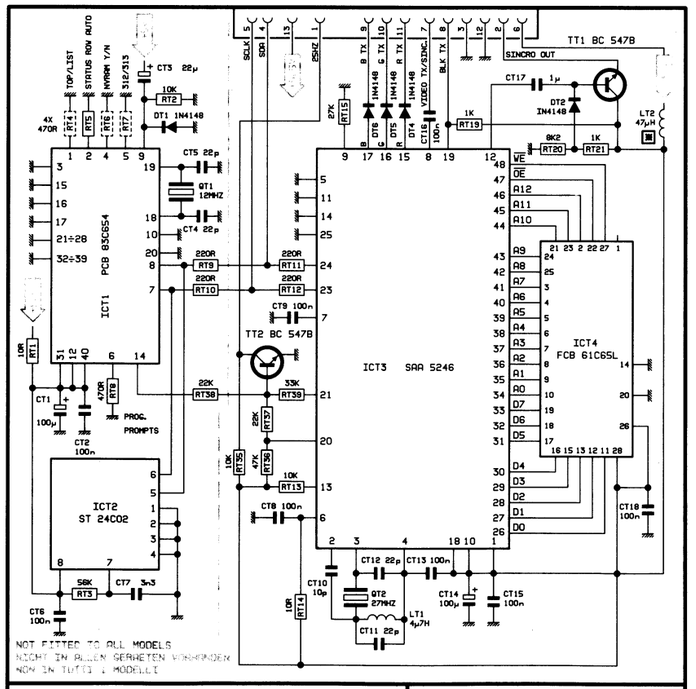

TLV 4320

TELETEXT P. C. B.
VIDEOTEXT MODUL
MODULO TELEVIDEO

9000744320

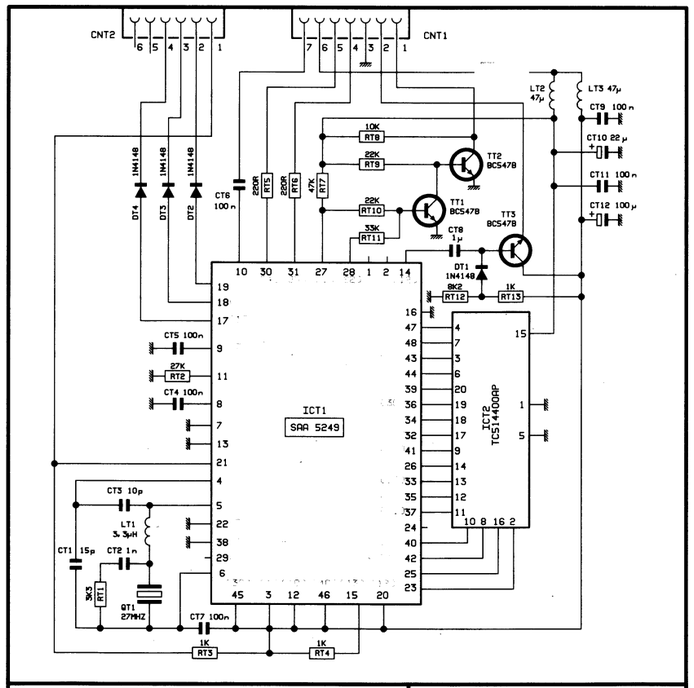

TLV 4100

TELETEXT P. C. B.
VIDEOTEXT MODUL
TELETEXT P. C. B.

9000744100

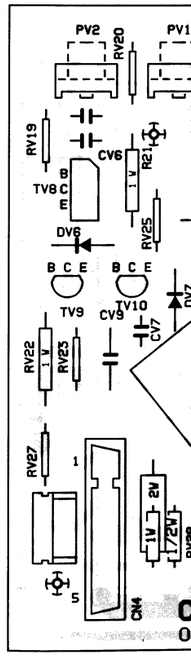

AM 4300

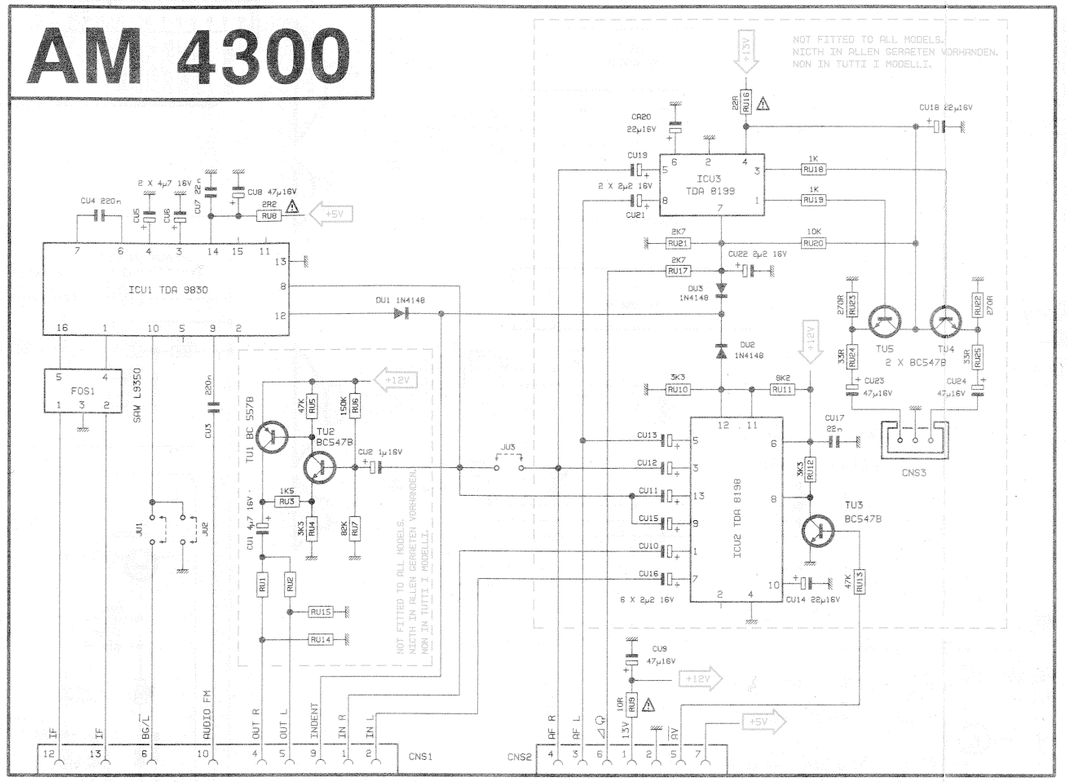

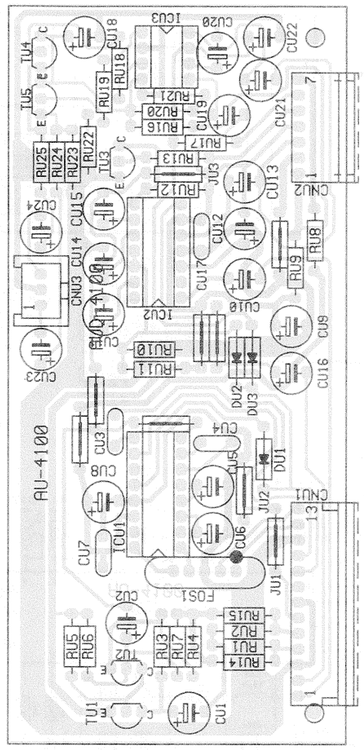

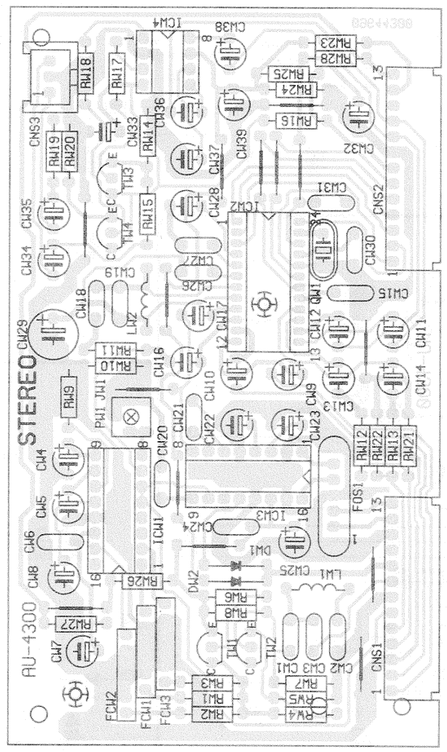

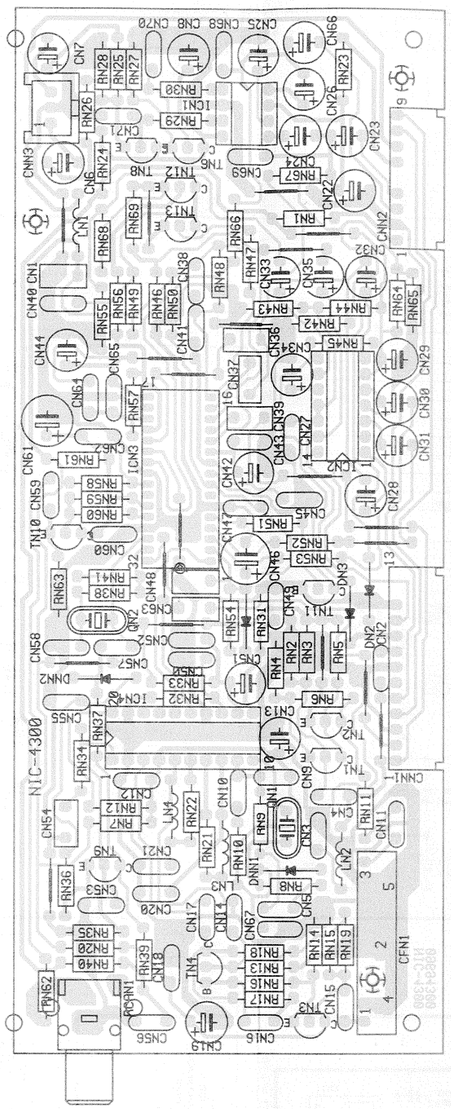

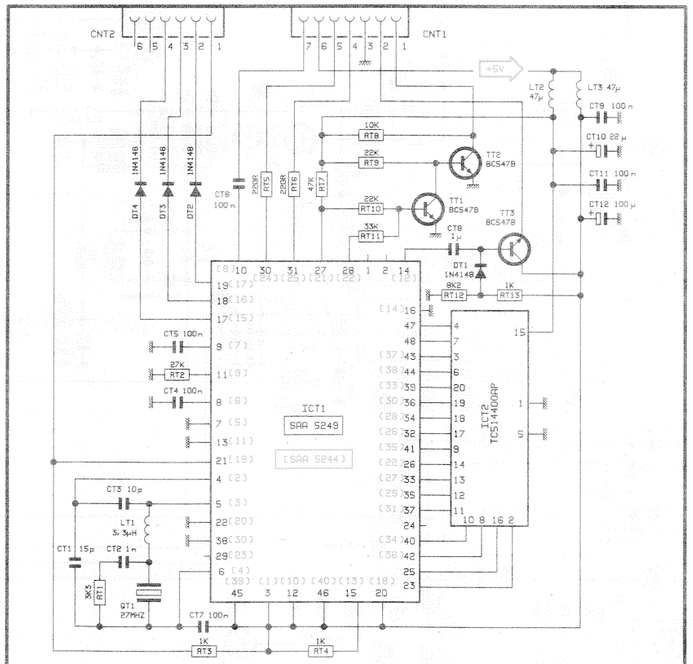

TLV 4100

TELETEXT P.C.B.
VIDEOTEXT MODUL
TELETEXT P.C.B.
S000744100

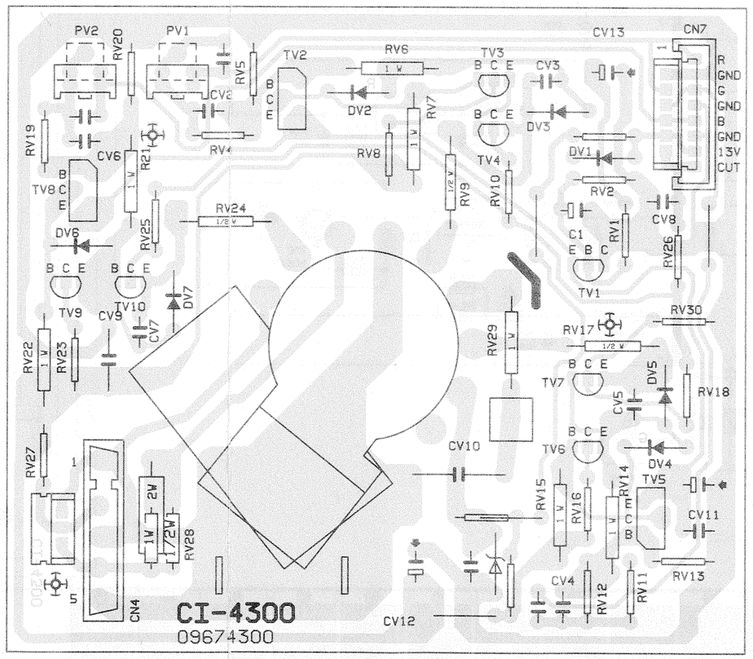

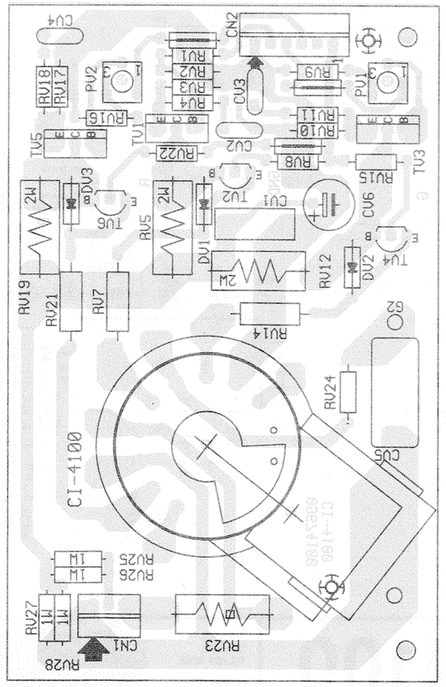

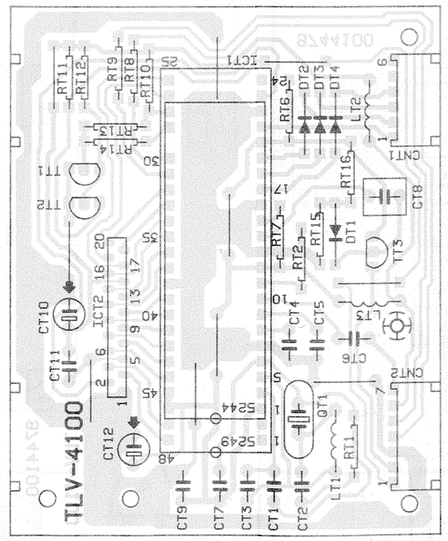

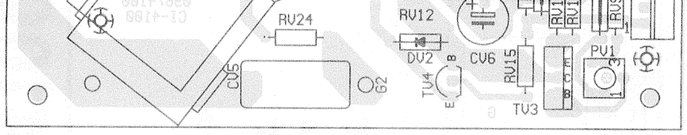
RV24
RV12
DV2
CV6
RV15
PV1
TV4
TV3
CV5

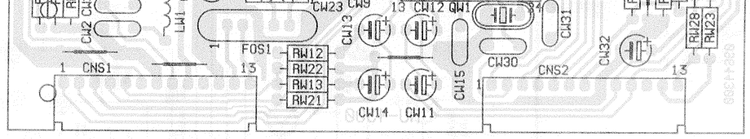
FOS1
RW12
RW22
RW13
RW21
CNS1
CNS2
CW14
CW11
CW15
CW30
CW31
CW32

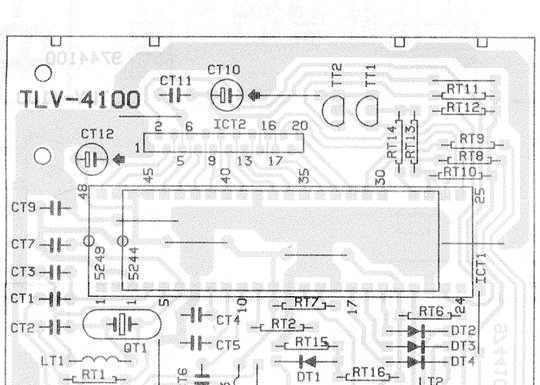
TLV-4100
CT11
CT10
TT2
TT1
CT12
ICT2
RT11
RT12
RT14
RT13
RT9
RT8
RT10
CT9
CT7
CT3
CT1
CT2
5249
5244
ICT1
QT1
LT1
RT1
CT4
CT5
RT7
RT2
RT15
RT6
DT2
DT3
DT4
DT1
RT16
CT6
LT3
LT2
TT3
CT8
CNT2
CNT1

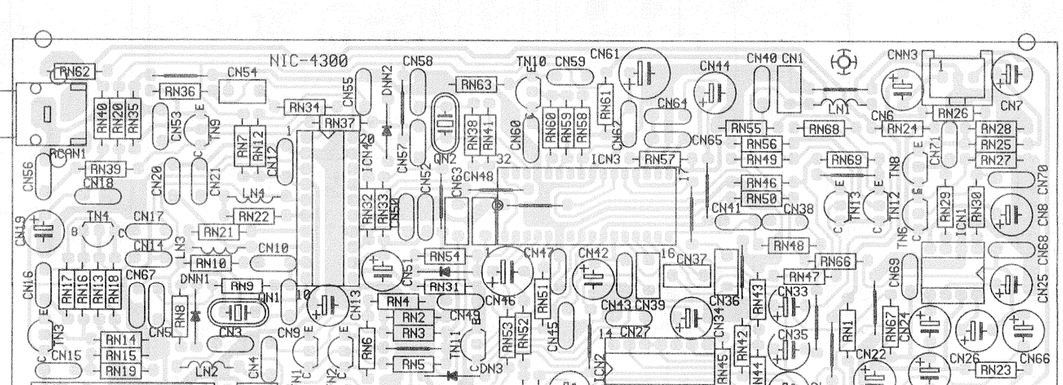
NIC-4300
RCAN1
CFN1
CNN1
CNN2
CNN3
RN62
RN36
RN40
RN20
RN35
RN39
RN18
RN34
RN37
RN63
RN61
RN55
RN56
RN49
RN46
RN50
RN68
RN69
RN24
RN26
RN28
RN25
RN27
RN29
RN30
RN48
RN66
RN47
RN43
RN42
RN44
RN45
RN64
RN65
RN54
RN31
RN21
RN22
RN10
RN9
RN8
RN17
RN16
RN13
RN18
RN14
RN15
RN19
RN4
RN2
RN3
RN5
RN11
CN54
CN55
CN58
CN59
CN61
CN44
CN40
CN1
CN7
CN6
CN8
CN70
CN68
CN25
CN66
CN23
CN26
CN22
CN28
CN31
CN30
CN29
CN32
CN33
CN35
CN36
CN37
CN38
CN39
CN41
CN42
CN43
CN45
CN46
CN47
CN48
CN49
CN50
CN51
CN52
CN53
CN57
CN60
CN62
CN63
CN64
CN65
CN67
CN69
CN24
CN27
CN34
ICN1
ICN2
ICN3
LN1
LN2
LN3
LN4
TN1
TN2
TN3
TN4
TN5
TN6
TN7
TN8
TN10
TN12
TN13
DNN1
DNN2
DN2
DN3
QN1
CN14
CN17
CN10
CN9
CN3
CN4
CN11
CN12
CN13
CN15
CN16
CN19
CN20
CN21
CN52
CN56
CN67
CN69
CN70
CN68
CN8
CN66

TLV-4320 TOP
CT18
CT14
ICT4
CT23
CT22
RT5
ICT1
ICT2
RT3
RT4
RT8
RT6
RT7
RT10
RT9
DT1
RT2
CT4
CT5
ICT3
CT15
CT13
CT10
CT12
CT9
RT15
RT21
RT39
RT12
RT11
RT14
RT13
RT36
QT2
LT1
CT11
CT8
RT20
RT19
DT4
DT5
DT6
RT37
TT2
GT1
RT38
LT2
RT35
CT16
CT17
DT2
TT1
RT1
CT1
CT2
CNT1
CNT2

TLV-4310 FLOF
CT18
CT14
ICT4
CT23
CT22
ICT5
ICT6
RT24
RT34
RT9
RT25
RT26
RT27
RT28
RT38
CT20
QT3
ICT3
CT15
CT13
CT10
CT12
CT9
RT15
RT21
RT39
RT11
RT12
RT14
RT13
RT36
QT2
LT1
CT11
CT8
RT20
RT19
DT4
DT5
DT6
RT37
TT2
RT22
RT30
RT31
RT32
RT23
RT29
DT3
LT2
RT35
CT16
CT17
DT2
TT1
CT19
CT21
CNT1
CNT2

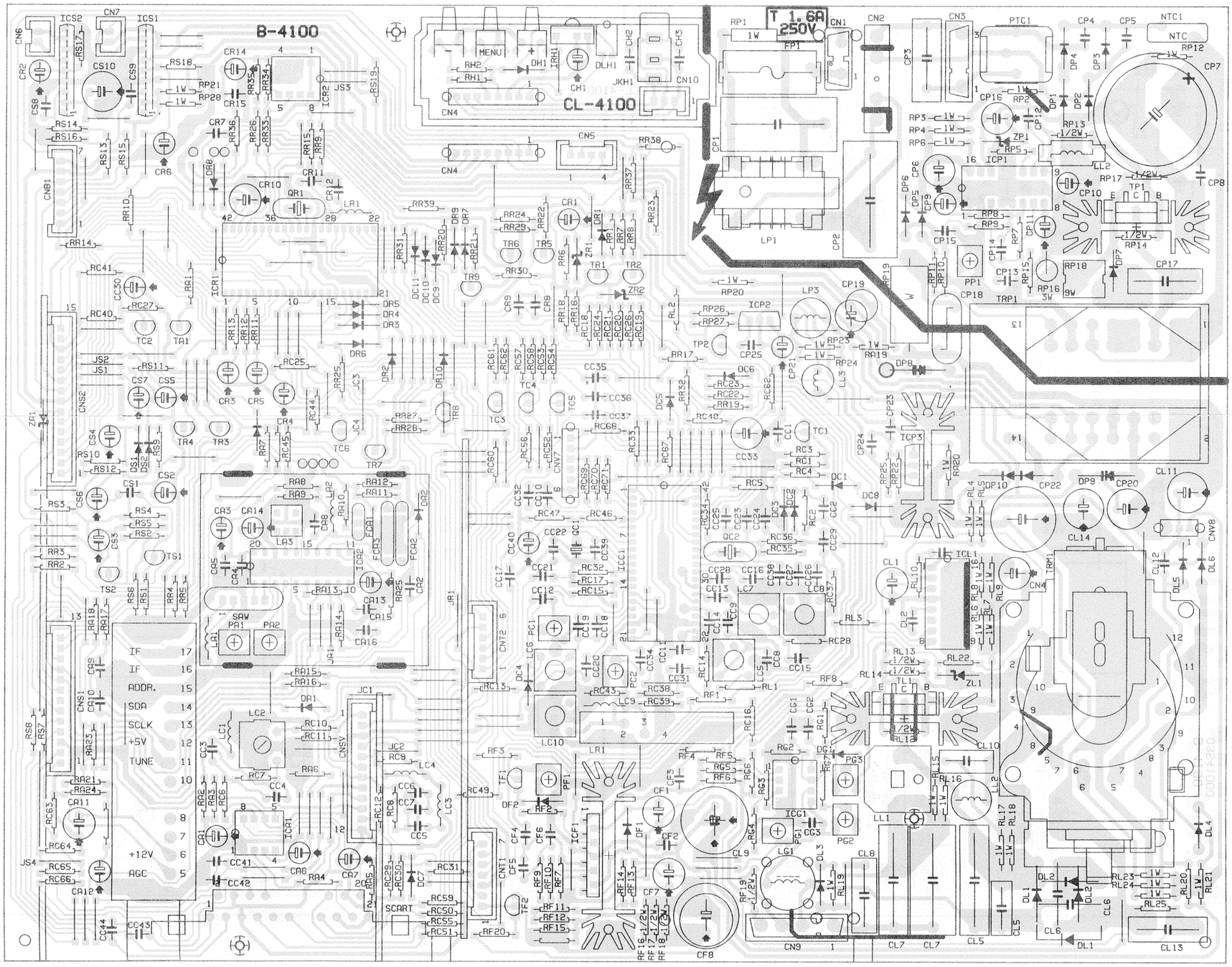
B-4100
CL-4100
MENU
CN4
CN5
CN10
CH1
CH2
CH5
DH1
IRH1
DLH1
JKH1
RH1
RH2
T 1.6A
250V
FP1
CN1
CN2
CN3
PTC1
NTC1
NTC
RP12
CP7
CP4
CP5
DP4
DP3
DP2
DP1
CP16
RP2
RP3
RP4
RP6
RP13
ZP1
RP5
ICP1
LL2
RP17
CP8
CP10
TP1
RP8
RP9
CP15
CP14
CP11
RP7
RP14
CP13
RP15
RP18
RP16
CP17
DP7
CP18
TRP1
RP19
RP11
RP10
RP20
ICP2
LP3
CP19
RP26
RP27
RP23
RP24
CP25
CP21
TP2
RR17
RR32
DC6
RC23
RC22
RC19
RC42
CC11
TC1
CC33
CP23
CP24
ICP3
RP25
RP22
RP21
RP20
CL11
DP10
CP22
DP9
CP20
CL14
CNV8
CL12
DL5
DL6
TRM1
CN4
CL1
ICL1
RL10
RL8
RL6
RL7
RL9
QL2
RL3
RC28
RC57
LC7
LC8
CC16
CC38
CC27
CC26
CC28
CC13
CC14
CC9
RC36
RC35
QC2
CC22
QC1
CC32
RC17
RC15
CC21
CC12
CC19
CC18
PC1
LC6
CC20
CC54
CC11
PC2
RC38
RC39
LC9
LC10
RC43
RC13
RC14
RC16
RF8
RL14
RL13
RL22
ZL1
TL1
RL12
RL11
CG1
CG2
RG1
RG2
RG7
PG3
PG2
CL10
RL15
RL16
LL1
LL2
RL17
RL18
CL8
CL9
LG1
ICG1
CG3
DL3
RL19
CF1
CF2
CF3
CF8
RF1
RF2
RF3
RF4
RF5
RF6
RG3
RG4
RG5
RG6
RC49
TF1
PF1
DF1
DF2
LR1
RF14
RF13
RF16
RF17
RF18
RF19
CF7
CN9
CL7
CL5
CL6
DL1
DL2
RL23
RL24
RL25
RL20
RL21
CL13
CN8
CN7
CN6
ICS2
ICS1
CS10
CS9
CR2
CS8
RS17
RS18
RP21
RP28
CR14
CR15
RR34
RR35
ICR2
JS3
RS19
RS14
RS16
RS13
RS15
CR7
RR36
RR26
RR35
RR15
RR9
CR6
DR8
CR11
CR10
QR1
CR12
LR1
CNB1
RR10
RR14
RR39
RR31
RR20
DR9
DR7
DR11
DR10
DR8
RR21
RR24
RR29
RR22
CR1
DR1
RR1
RR7
RR8
RR23
ZR1
TR6
TR5
RR6
TR1
TR2
TR9
RR30
ZR2
RC41
CC30
RC27
RA1
ICR1
RC40
TC2
TA1
RR13
RR12
RR11
RC25
RR25
JC3
JS2
JS1
RS11
CS7
CS5
CR3
CR5
CR4
RC44
RC45
RA7
CNS2
ZG1
CS4
RS9
DS1
DS2
RS10
RS12
TR4
TR3
TC6
TR7
CS1
CS2
CS6
CS3
RS3
RS4
RS5
RS2
RR3
RR2
TS1
TS2
RS6
RS1
RR4
RR5
RA8
RA9
LA2
RA10
RA12
RA11
CA3
CA14
CA8
CA5
CA4
LA3
ICA2
FCR1
FCR2
FCA1
FCA2
DA2
RA13
CA13
CA15
CA16
RA25
CA2
JR1
SAW
LA1
PA1
PA2
RA14
JA1
RA15
RA16
DA1
JC1
CNSV
JC2
RC9
LC4
RA6
RC7
CC4
CC3
LC1
LC2
RC10
RC11
CC6
CC7
LC3
RC8
CC5
RC12
CA1
CA6
CA7
RA4
CC41
CC42
RC29
RC30
DC7
RC31
RC59
RC50
RC55
RC51
SCART
RF20
CNT1
CF5
CF6
RF9
RF10
RF7
RF11
RF12
RF15
TF2
CNT2
RA21
RA24
RA23
RS8
RS7
RR8
RR7
CA11
CA12
RC63
RC64
RC65
RC66
JS4
CC44
CC43
RA2
RA3
RA5
CA9
CA10
CC8
CC9
CC10
CC1
CC2
CC29
CC31
CC15
RC1
RC4
RC5
RC2
RC3
DC1
DC8
DC2
DC3
DC4
DC5
RC48
RC33
RC67
RC68
RC69
RC70
RC71
RC56
RC52
CNV7
RC60
RC61
RC62
RC57
RC58
RC53
RC54
CC35
CC36
CC37
CC34
CC25
CC24
CC23
CC17
CC40
CC39
CC31
RC13
RC49
RC46
RC47
RC32
RC17
RC15
RC43
RC38
RC39
RC16
RC18
RC24
RC21
RC20
RC26
RC19
RR18
RR16
RR15
RR27
RR28
RR37
RR38
RR33
RR32
RR31
RR30
RR29
RR22
RR24
RR23
RR17
RR19
RR12
RR11
RR10
RR9
RR8
RR7
RR6
RR5
RR4
RR3
RR2
RR1
RA19
RA20
RA22
RA18
RA17
RA16
RA15
RA14
RA13
RA12
RA11
RA10
RA9
RA8
RA7
RA6
RA5
RA4
RA3
RA2
RA1
CA12
CA11
CA9
CA10
CA8
CA7
CA6
CA5
CA4
CA3
CA2
CA1
CA13
CA15
CA16
CA14
CA17
CA18
CA19
CA20
CA21
CA22
CA23
CA24
CA25
CA26
CA27
CA28
CA29
CA30
CA31
CA32
CA33
CA34
CA35
CA36
CA37
CA38
CA39
CA40
CA41
CA42
CA43
CA44
CA45
CA46
CA47
CA48
CA49
CA50
CA51
CA52
CA53
CA54
CA55
CA56
CA57
CA58
CA59
CA60
CA61
CA62
CA63
CA64
CA65
CA66
CA67
CA68
CA69
CA70
CA71
CA72
CA73
CA74
CA75
CA76
CA77
CA78
CA79
CA80
CA81
CA82
CA83
CA84
CA85
CA86
CA87
CA88
CA89
CA90
CA91
CA92
CA93
CA94
CA95
CA96
CA97
CA98
CA99
CA100
CA101
CA102
CA103
CA104
CA105
CA106
CA107
CA108
CA109
CA110
CA111
CA112
CA113
CA114
CA115
CA116
CA117
CA118
CA119
CA120
CA121
CA122
CA123
CA124
CA125
CA126
CA127
CA128
CA129
CA130
CA131
CA132
CA133
CA134
CA135
CA136
CA137
CA138
CA139
CA140
CA141
CA142
CA143
CA144
CA145
CA146
CA147
CA148
CA149
CA150
CA151
CA152
CA153
CA154
CA155
CA156
CA157
CA158
CA159
CA160
CA161
CA162
CA163
CA164
CA165
CA166
CA167
CA168
CA169
CA170
CA171
CA172
CA173
CA174
CA175
CA176
CA177
CA178
CA179
CA180
CA181
CA182
CA183
CA184
CA185
CA186
CA187
CA188
CA189
CA190
CA191
CA192
CA193
CA194
CA195
CA196
CA197
CA198
CA199
CA200
CA201
CA202
CA203
CA204
CA205
CA206
CA207
CA208
CA209
CA210
CA211
CA212
CA213
CA214
CA215
CA216
CA217
CA218
CA219
CA220
CA221
CA222
CA223
CA224
CA225
CA226
CA227
CA228
CA229
CA230
CA231
CA232
CA233
CA234
CA235
CA236
CA237
CA238
CA239
CA240
CA241
CA242
CA243
CA244
CA245
CA246
CA247
CA248
CA249
CA250
CA251
CA252
CA253
CA254
CA255
CA256
CA257
CA258
CA259
CA260
CA261
CA262
CA263
CA264
CA265
CA266
CA267
CA268
CA269
CA270
CA271
CA272
CA273
CA274
CA275
CA276
CA277
CA278
CA279
CA280
CA281
CA282
CA283
CA284
CA285
CA286
CA287
CA288
CA289
CA290
CA291
CA292
CA293
CA294
CA295
CA296
CA297
CA298
CA299
CA300
CA301
CA302
CA303
CA304
CA305
CA306
CA307
CA308
CA309
CA310
CA311
CA312
CA313
CA314
CA315
CA316
CA317
CA318
CA319
CA320
CA321
CA322
CA323
CA324
CA325
CA326
CA327
CA328
CA329
CA330
CA331
CA332
CA333
CA334
CA335
CA336
CA337
CA338
CA339
CA340
CA341
CA342
CA343
CA344
CA345
CA346
CA347
CA348
CA349
CA350
CA351
CA352
CA353
CA354
CA355
CA356
CA357
CA358
CA359
CA360
CA361
CA362
CA363
CA364
CA365
CA366
CA367
CA368
CA369
CA370
CA371
CA372
CA373
CA374
CA375
CA376
CA377
CA378
CA379
CA380
CA381
CA382
CA383
CA384
CA385
CA386
CA387
CA388
CA389
CA390
CA391
CA392
CA393
CA394
CA395
CA396
CA397
CA398
CA399
CA400
CA401
CA402
CA403
CA404
CA405
CA406
CA407
CA408
CA409
CA410
CA411
CA412
CA413
CA414
CA415
CA416
CA417
CA418
CA419
CA420
CA421
CA422
CA423
CA424
CA425
CA426
CA427
CA428
CA429
CA430
CA431
CA432
CA433
CA434
CA435
CA436
CA437
CA438
CA439
CA440
CA441
CA442
CA443
CA444
CA445
CA446
CA447
CA448
CA449
CA450
CA451
CA452
CA453
CA454
CA455
CA456
CA457
CA458
CA459
CA460
CA461
CA462
CA463
CA464
CA465
CA466
CA467
CA468
CA469
CA470
CA471
CA472
CA473
CA474
CA475
CA476
CA477
CA478
CA479
CA480
CA481
CA482
CA483
CA484
CA485
CA486
CA487
CA488
CA489
CA490
CA491
CA492
CA493
CA494
CA495
CA496
CA497
CA498
CA499
CA500
CA501
CA502
CA503
CA504
CA505
CA506
CA507
CA508
CA509
CA510
CA511
CA512
CA513
CA514
CA515
CA516
CA517
CA518
CA519
CA520
CA521
CA522
CA523
CA524
CA525
CA526
CA527
CA528
CA529
CA530
CA531
CA532
CA533
CA534
CA535
CA536
CA537
CA538
CA539
CA540
CA541
CA542
CA543
CA544
CA545
CA546
CA547
CA548
CA549
CA550
CA551
CA552
CA553
CA554
CA555
CA556
CA557
CA558
CA559
CA560
CA561
CA562
CA563
CA564
CA565
CA566
CA567
CA568
CA569
CA570
CA571
CA572
CA573
CA574
CA575
CA576
CA577
CA578
CA579
CA580
CA581
CA582
CA583
CA584
CA585
CA586
CA587
CA588
CA589
CA590
CA591
CA592
CA593
CA594
CA595
CA596
CA597
CA598
CA599
CA600
CA601
CA602
CA603
CA604
CA605
CA606
CA607
CA608
CA609
CA610
CA611
CA612
CA613
CA614
CA615
CA616
CA617
CA618
CA619
CA620
CA621
CA622
CA623
CA624
CA625
CA626
CA627
CA628
CA629
CA630
CA631
CA632
CA633
CA634
CA635
CA636
CA637
CA638
CA639
CA640
CA641
CA642
CA643
CA644
CA645
CA646
CA647
CA648
CA649
CA650
CA651
CA652
CA653
CA654
CA655
CA656
CA657
CA658
CA659
CA660
CA661
CA662
CA663
CA664
CA665
CA666
CA667
CA668
CA669
CA670
CA671
CA672
CA673
CA674
CA675
CA676
CA677
CA678
CA679
CA680
CA681
CA682
CA683
CA684
CA685
CA686
CA687
CA688
CA689
CA690
CA691
CA692
CA693
CA694
CA695
CA696
CA697
CA698
CA699
CA700
CA701
CA702
CA703
CA704
CA705
CA706
CA707
CA708
CA709
CA710
CA711
CA712
CA713
CA714
CA715
CA716
CA717
CA718
CA719
CA720
CA721
CA722
CA723
CA724
CA725
CA726
CA727
CA728
CA729
CA730
CA731
CA732
CA733
CA734
CA735
CA736
CA737
CA738
CA739
CA740
CA741
CA742
CA743
CA744
CA745
CA746
CA747
CA748
CA749
CA750
CA751
CA752
CA753
CA754
CA755
CA756
CA757
CA758
CA759
CA760
CA761
CA762
CA763
CA764
CA765
CA766
CA767
CA768
CA769
CA770
CA771
CA772
CA773
CA774
CA775
CA776
CA777
CA778
CA779
CA780
CA781
CA782
CA783
CA784
CA785
CA786
CA787
CA788
CA789
CA790
CA791
CA792
CA793
CA794
CA795
CA796
CA797
CA798
CA799
CA800
CA801
CA802
CA803
CA804
CA805
CA806
CA807
CA808
CA809
CA810
CA811
CA812
CA813
CA814
CA815
CA816
CA817
CA818
CA819
CA820
CA821
CA822
CA823
CA824
CA825
CA826
CA827
CA828
CA829
CA830
CA831
CA832
CA833
CA834
CA835
CA836
CA837
CA838
CA839
CA840
CA841
CA842
CA843
CA844
CA845
CA846
CA847
CA848
CA849
CA850
CA851
CA852
CA853
CA854
CA855
CA856
CA857
CA858
CA859
CA860
CA861
CA862
CA863
CA864
CA865
CA866
CA867
CA868
CA869
CA870
CA871
CA872
CA873
CA874
CA875
CA876
CA877
CA878
CA879
CA880
CA881
CA882
CA883
CA884
CA885
CA886
CA887
CA888
CA889
CA890
CA891
CA892
CA893
CA894
CA895
CA896
CA897
CA898
CA899
CA900
CA901
CA902
CA903
CA904
CA905
CA906
CA907
CA908
CA909
CA910
CA911
CA912
CA913
CA914
CA915
CA916
CA917
CA918
CA919
CA920
CA921
CA922
CA923
CA924
CA925
CA926
CA927
CA928
CA929
CA930
CA931
CA932
CA933
CA934
CA935
CA936
CA937
CA938
CA939
CA940
CA941
CA942
CA943
CA944
CA945
CA946
CA947
CA948
CA949
CA950
CA951
CA952
CA953
CA954
CA955
CA956
CA957
CA958
CA959
CA960
CA961
CA962
CA963
CA964
CA965
CA966
CA967
CA968
CA969
CA970
CA971
CA972
CA973
CA974
CA975
CA976
CA977
CA978
CA979
CA980
CA981
CA982
CA983
CA984
CA985
CA986
CA987
CA988
CA989
CA990
CA991
CA992
CA993
CA994
CA995
CA996
CA997
CA998
CA999
CA1000
IF
ADDR.
SDA
SCLK
+5V
TUNE
+12V
AGC

NICAM 4300

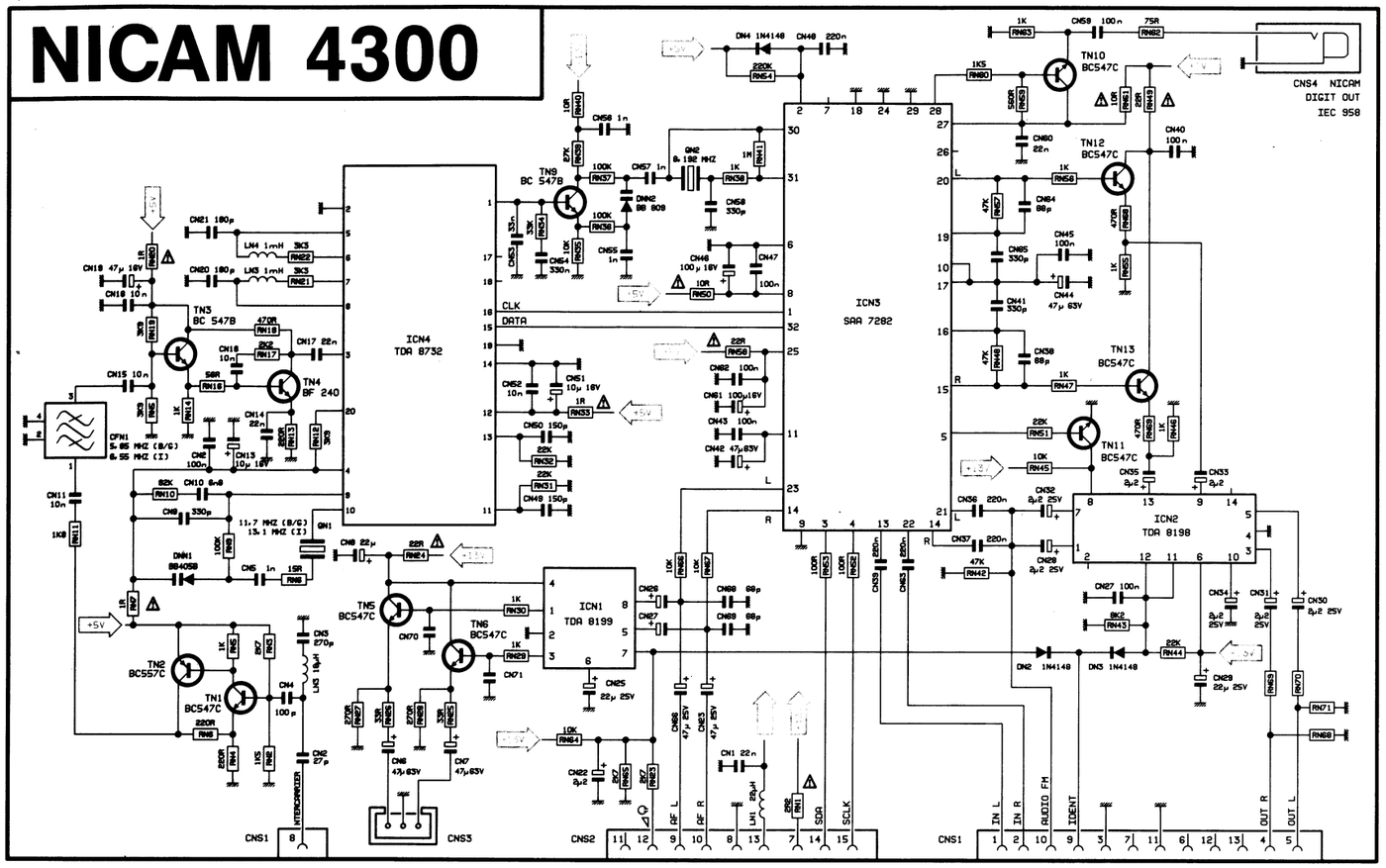

STEREO 4300

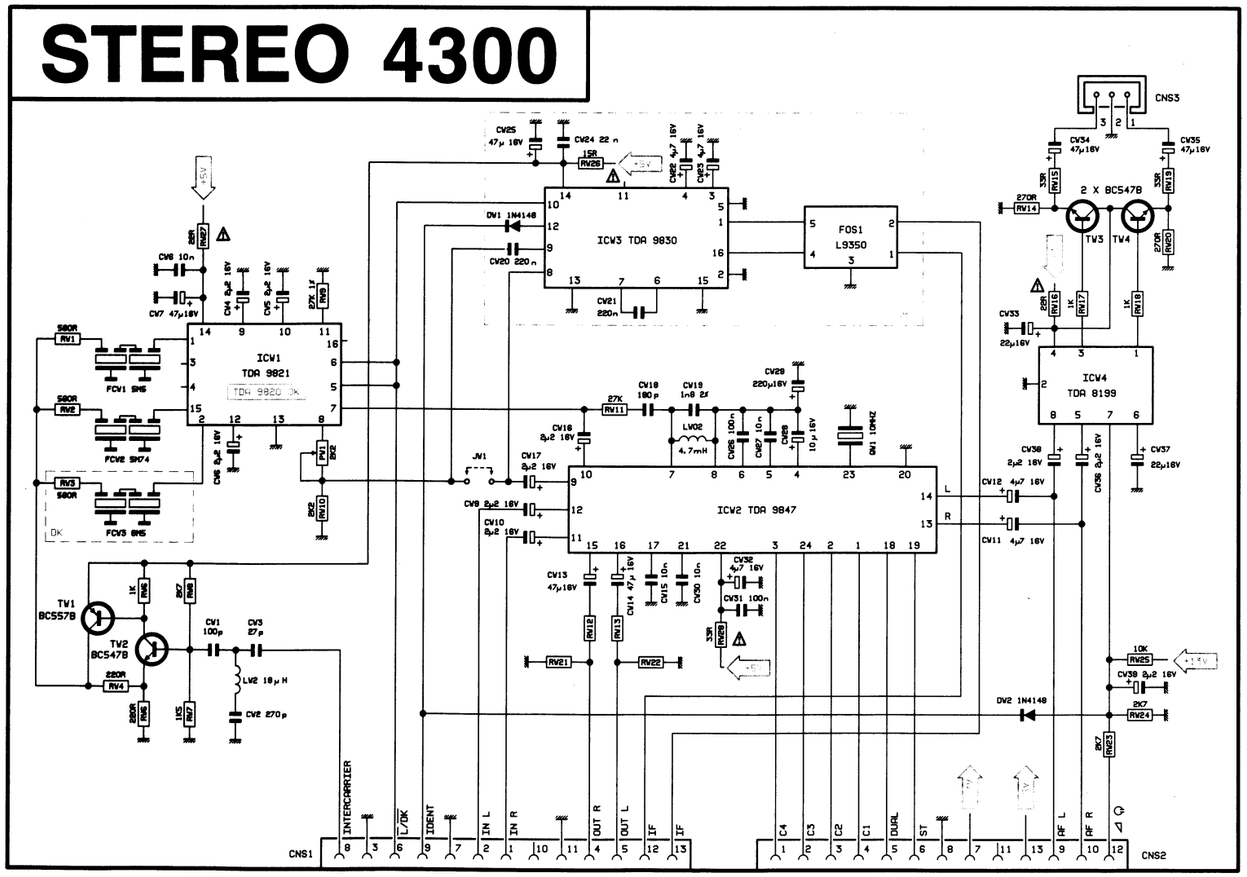

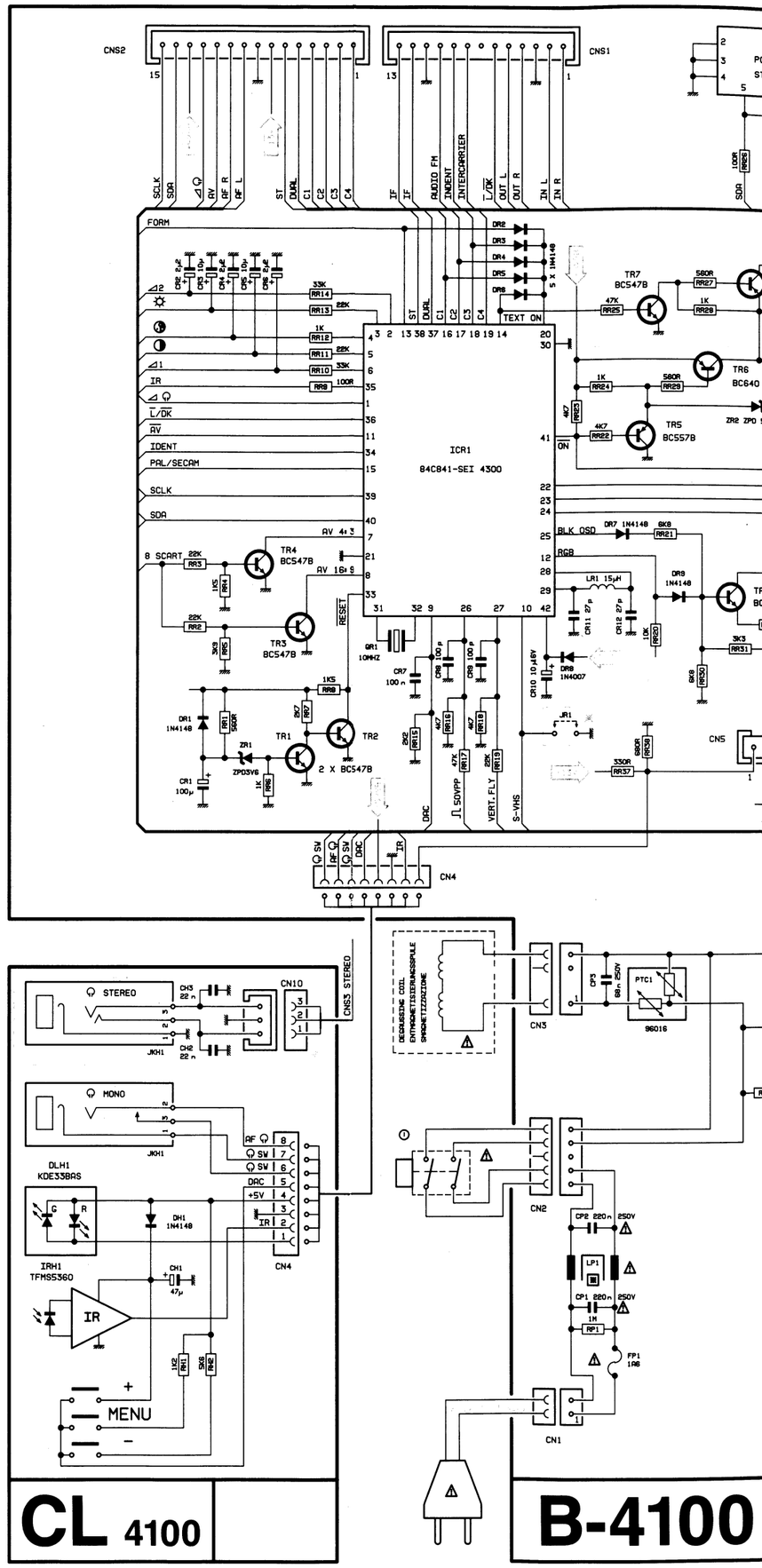

CL 4100

B-4100

UV 914/916

ICR1
84C841-SEI 4300

ICR2
PCF8582
ST24C02

ICA1
TDA 9800
TDA 9802
TDA 9803

ICA1 TEA 2014

SAW
G1984M (BG)
J1952 (I)
K2951 (DK)

ICS1
TDA 7056 A

ICS2
TDA 7056 A

ICG1
TDA 8145

ICF1 TDA 8174 W

ICP1 TEA 2261

ICP2
TDA7809

ICP3
TDA7805

ICL1
TDA8140

TS1 BC547B
TS2 BC557B
TR1 2 X BC547B
TR2
TR3 BC547B
TR4 BC547B
TR5 BC557B
TR6 BC640
TR7 BC547B
TR8 BC640
TR9 BC547B
TA1 BC547B
TC1 BC557B
TF1 BC547B
TF2 BC547B

TP1 S2000
TL1 S2000 AF
TP2 BC640

CN1
CN2
CN3
CN4
CN5
CN6
CN7
CN8
CN10
CNS1
CNS2
CNS3 STEREO
CNSV

JA1
JS1
JS2
JS3
JS4

TRP1

DA1 2 X 1N4148
DA2
DB1 1N4148
DB2 1N4148
DC1 1N4148
DC2 BAV21
DC3 BAV21
DD1 1N4148
DD2 1N4148
DE1 1N4148
DE2 1N4148
DF1 1N4007
DF2 1N4148
DG1 1N4148
DH1 1N4148
DL1 BY228
DL2 BY360
DL3 BA159
DL4 BA159
DL5 BY95C
DP1 4 X 1N4007
DP7 BA159
DP8 BA159
DP9 BYW95B
DP10 BYW95C
DR1 1N4148
DR2 5 X 1N4148
DR7 1N4148
DR8 1N4007
DR9 1N4148
DR10 1N4148

ZR1 ZPD3V6
ZR2 ZPD 5V6
ZP1 ZPD 3V6

FCA1 TPS 5.5MHA TPW01B (I)
FCA2 SFT 6.0MA (I) SFT 6.5MA (DK)
FCA3 SFT 5.5MA

LA1 1µH
LA2 15µH
LA3 6758
LC1 22µH
LC2 DL-0009
LC3 56µH
LC4 15µH
LG1 13.5mH
LP1
LP2 8µH
LP3 110µH

QR1 10MHZ

PTC1 96016

DEGAUSSING COIL
ENTMAGNETISIERUNGSSPULE
SMAGNETIZZAZIONE

4 X 1N4007

B-4100

CH9803S
CH9803S
TELAIO BASE

900054100

4100

H 0.8VPP	H 350mVPP	H 0.5VPP	H 2VPP	H 0.6VPP	H 2.5VPP	H 2.5VPP	H 2.5VPP	V 52VPP	H 1200VPP	H 1.5VPP	H 1.2VPP	H 210VPP

Chassis Professional 4300

CI-4300

CRT CONN.
BILDROHRPL.
ZOCCOLO CINESCOPIO

9000874300

EMC COMPONENT
EMC BAUTEIL
COMPONENTE EMC
PIECE EMC

SAFETY PART
WHEN REPAIRING. USE ORIGINAL PARTS ONLY.
SICHERHEITSBAUTEIL
BEI ERSATZ NUR ORIGINALTEIL VERWENDEN.
COMPONENTE DI SICUREZZA
IN CASO DI SOSTITUZIONE UTILIZZARE SOLO COMPONENTI ORIGINALI.
PIECE DE SECURITE
N° UTILISER QUE LES PIECES D' ORIGINES.
COMPONENTE DE SEGURIDAD
UTILIZAR SOLO COMPONENTES ORIGINALES.

SUBJECT TO MODIFICATION
ÄNDERUNGEN VORBEHALTEN
CON RISERVA DI MODIFICHE

S095414300

IMPORTANT WARNING
When the back panel is removed, high voltage parts are exposed, so any adjustment must be carried out by specialized personnel only. Before performing any of the following adjustments, switch on the set for about ten minutes, on average brightness and without the aerial attached («snow effect» only).
- Power Supply
Switch power supply to 220 V.
With contrast and brightness at the minimum, adjust PP1 to 148 V ± 0,5 V at CP22 terminals.
- Adjustment of picture
Horizontal adjustment
Use PC1 for correct adjustment of picture's horizontal position.
Picture width
Use PG3 to adjust picture width
Crosswise Correction
Use PG2 and PG1 for picture's best geometry.
Picture Height
Use PF1 to adjust.
- Focusing
Adjust picture focus with the contrast near to maximum.
- Adjusting picture tube tension
Set contrast and brightness to the minimum. Measure direct current voltage at the three picture-tube cathodes and adjust the G2 screen grid so that the cathode voltage at its higest value is 175 V. Send a «white page» signal to the aerial. Set brightness and contrast to maximum and adjust PV1 and PV2 so that all colour shades disappear.

WICHTIGER HINWEIS
Nach der Entfernung des Rückendeckels des Gerätes werden Teile zugänglich, die auch Hochspannungen besitzen. Infolgesdessen darf jede Reparatur ausschliessslich durch Fachpersonal durchgeführt werden.
Vor der Durchführung der nachstehend beschriebenen Einstellungen soll das Gerät ca. 10 Minuten lang eingeschaltet werden, z.zw. mit mässiger Bildschirmbeleuchtung und ohne Antennesignal (lediglich «Schnee-effekt»).
- Netzteil
Die Netzspannung auf 220 V einstellen.
Danach in Betriebszustand - mit Kontrast und Helligkeit auf Mindestwert - PP1 auf 148 V ± 0,5 V an den Enden von CP22 einstellen.
- Einstellung der Bildgeometrie
Horizontallage
PC1 für die korrekte Horizontallage des Bildes einstellen.
Horizontalamplitude
Die Einstellung mit PG3 für die einwandfreie Horizontalamplitude vornehmen.
Ost-West-Korrektur
Die Einstellung mit PG2 (Kissen) und PG1 (Trapez) für eine bessere Bildgeometrie durchführen.
Vertikalamplitude
Die Einstellung mit PF1 durchführen.
- Fokussierung
Bei auf nahezu Maximalwert eingestellten Kontrast die Einstellung für die bestmögliche Bildfokussierung durchführen.
Einstellung des Arbeitspunktes der Bildröhre
Kontrast und Helligkeit auf Mindestwert einstellen. Die Gleichspannung der drei Kathoden der Bildröhre messen und den Schirmgitterregler G2 so eistellen, dass die beim Maximalwert festgestellte Spannung 175 V beträgt.
In die Antenne ein «weisse Seite-Signal» einschalten. Helligkeit und Kontrast nahezu auf Maximalwert einstellen und PV1 sowie PV2 so einstellen, dass jede Farbabtönung verschwindet.

AVVERTENZA IMPORTANTE
La rimozione dello schienale rende accessibili parti sottoposte a tensioni anche elevate, ogni intervento dovrà perciò essere effettuato esclusivamente da personale specializzato. Prima dell'esecuzione delle regolazioni di seguito descritte l'apparecchio deve essere acceso per una decina di minuti con schermo mediamente illuminato senza segnale in antenna (solo «effetto neve»).
- Alimentatore
Regolare la tensione di rete su 220 V. Regolare quindi, in condizioni di funzionamento, con contrasto e luminosità al minimo, PP1 per 148 V ± 0,5 V ai capi di CP22.
- Regolazione della geometria dell'immagine
Posizione orizzontale
Regolare PC1 per una corretta posizione orizzontale dell'immagine.
Ampiezza orizzontale
Regolare con PG3 per la corretta ampiezza orizzontale.
- Correzione Est-Ovest
Regolare con PG2 (cuscino) e PG1 (trapezio) per la migliore geometria dell'immagine.
Ampiezza verticale
Regolare con PF1
- Focalizzazione
Con il contrasto prossimo al massimo regolare per la migliore focalizzazione dell'immagine.
- Regolazione punto di lavoro del cinescopio
Regolare contrasto e luminosità al minimo. Misurare la tensione continua dei tre catodi del cinescopio e regolare il potenziometro di griglia schermo G2 in modo che la tensione del catodo riscontrato a valore più elevato sia di 175 V
Inserire in antenna un segnale a «pagina bianca». Portare luminosità e contrasto prossimi al massimo e regolare PV1 e PV2 in modo che scompaia ogni sfumatura di colore.

RECOMANDATIONS IMPORTANTES
Ne jamais enlever le panneau arrière de protection avant d'avoir débranché la fiche du secteur.
Cet appareil est conforme aux normes internationales de protection contre les radiations et les parasites radioélectriques.
- Alimentation
Régler la tension secteur sur 220 V.
En condition de fonctionnement avec contraste et luminosité au minimum, régler PP1 sur une tension de 148 V ± 0,5 V aux bornes de CP22.
- Réglage de la géométrie de l'image
Position horizontale
PC1 permet de régler correctement la position horizontale de l'image.
Largeur d'image
PG3 permet de régler correctement la largeur d'image.
Correction diagonale
PG2 et PG1 permettent le réglage de la géométrie de l'image.
Hauteur d'image
Régler avec PF1.
- Focalisation
Effectuer la mise au point avec le contraste presque au maximum.
- Réglage de la tension du tube
Régler le contraste et la luminosité au minimum. Mesurer la tension continue des trois cathodes du tube et régler la grille de l'écran G2 jusqu'à ce que l la tension de la cathode plus hant se stabilise sur 175 V. Envoyer à l'antenne un signal à «page blanche». Porter la luminosité et le contraste presque au maximum puis régler PV1 et PV2 de façon à éliminer toutes les nuances de couleur.

ADVERTENCIA IMPORTANTE
Al quitar la tapa posterior de protección deja accesibles partes con tensiones elevadas y peligrosas, por lo tanto solo debe ser llevado a cabo por personas especializadas. Antes de efectuar los ajustes y regulaciónes descritas a continuación debe permanecer el aparato en marcha unos diez minutos con lapantalla sin señal en antena (efecto nieve) y con el control de brillo en su posición media.
- Alimentación
Ajustar la tensión de red a 220 V.
Ajustar PP1 (situando los controles de contraste y brillo al minimo) hasta obtener 148 V ± 0,5 V en los terminales de CP22.
- Regulación de la geometría de la imagen
Centrado horizontal
Regular PC1 hasta obtener un correcto centrado de la imagen.
- Amplitud horizontal
Regular PG3 hasta obtener una correcta amplitud de la imagen.
Correccion est-oeste
Regular mediante PG2 (cojin) y PG1 (trapecio) hasta obtener una imagen correcta.
Altura de la imagen
Regularla mediante PF1 hasta obtener una altura correcta.
- Foco
Con el contraste casi al maximo ajustar el potenciometro de foco hasta la maxima focalización de la imagen.
- Ajuste del punto de trabajo del tubo de imagen
Regular el contraste y el brillo al minimo. Medir la tensión continua de los tres catodos del tubo de imagen y ajustar el potenciometro de G2 de manera que la tensión del cátodo mas elevada sea de 175 V.
Conectar a la toma de antena una señal generador modulado, para obtener una «Pantalla blanca».
Regular el brillo y el contraste, casi al máximo y ajustar PV1 y PV2 hasta que desaparezca todo matiz de color.

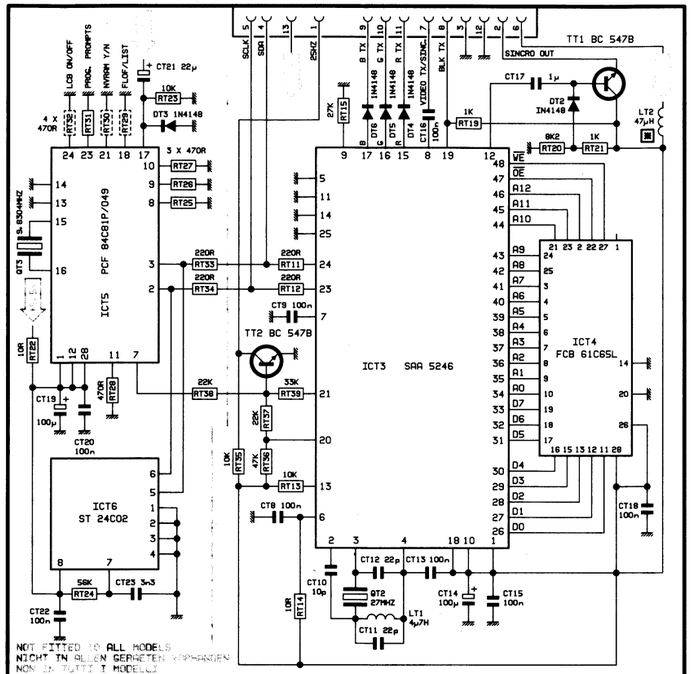

TLV 4310

TELETEXT P. C. B.
VIDEOTEXT MODUL
MODULO TELEVIDEO

8000744310

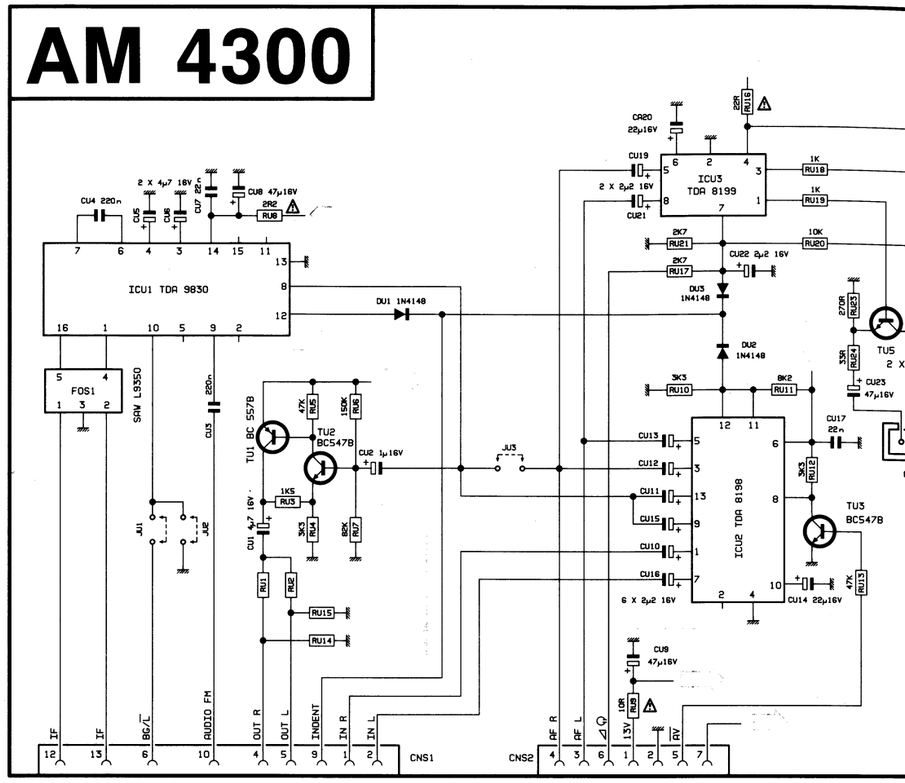

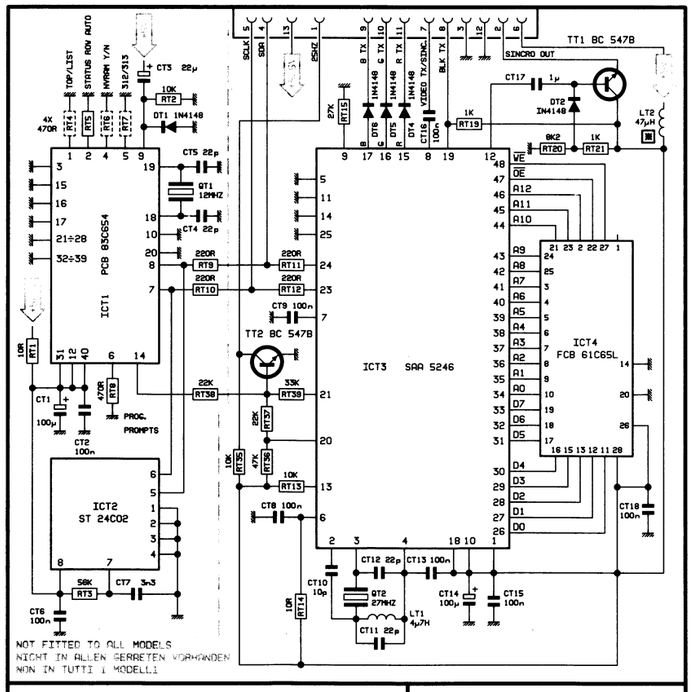

TLV 4320

TELETEXT P. C. B.
VIDEOTEXT MODUL
MODULO TELEVIDEO

8000744320

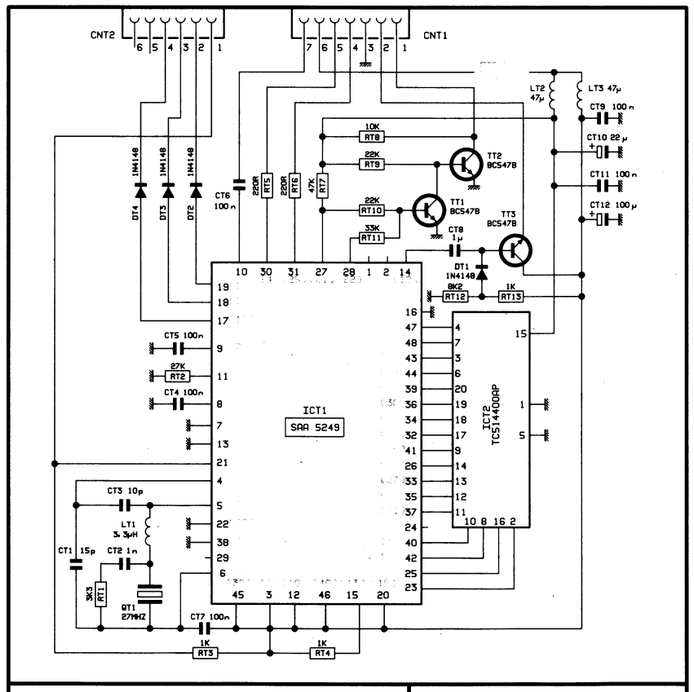

TLV 4100

TELETEXT P. C. B.
VIDEOTEXT MODUL
TELETEXT P. C. B.

8000744100

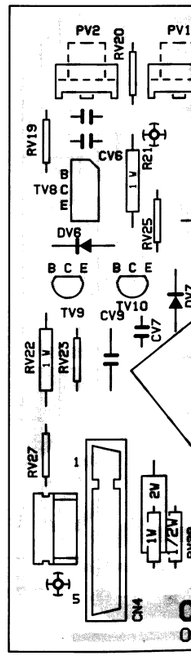

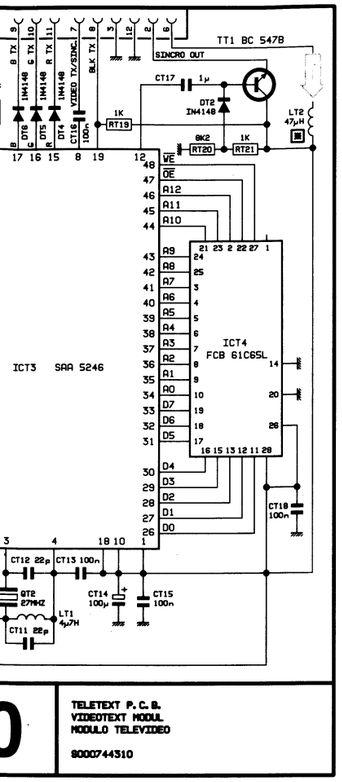

AM 4300

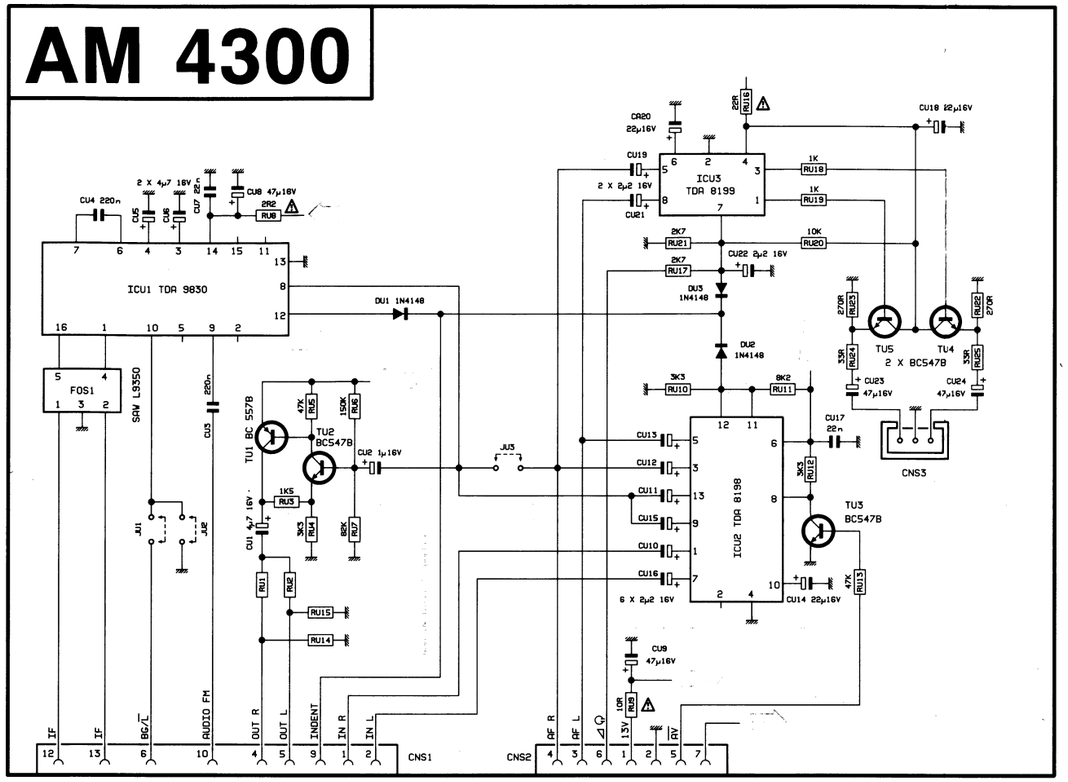

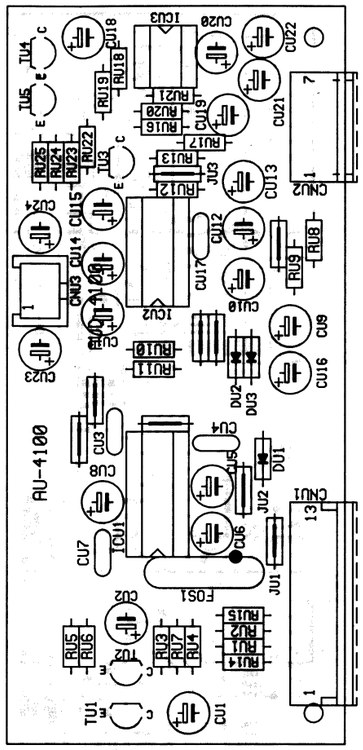

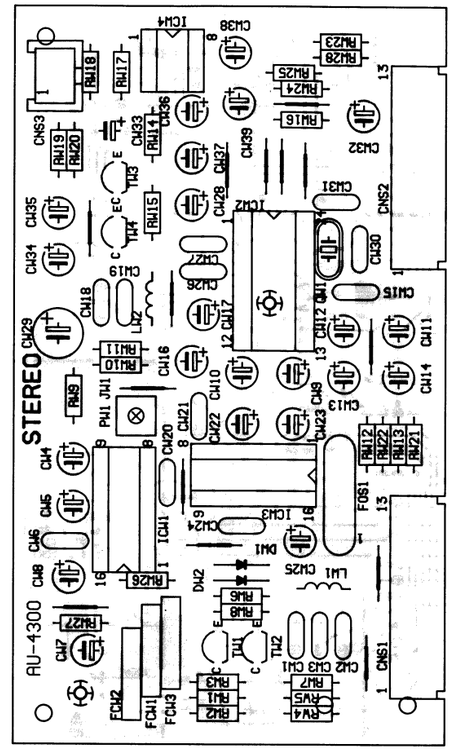

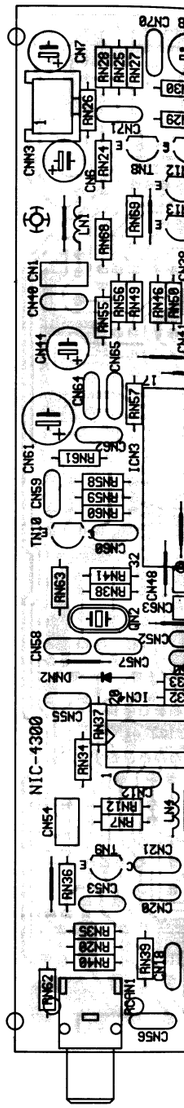

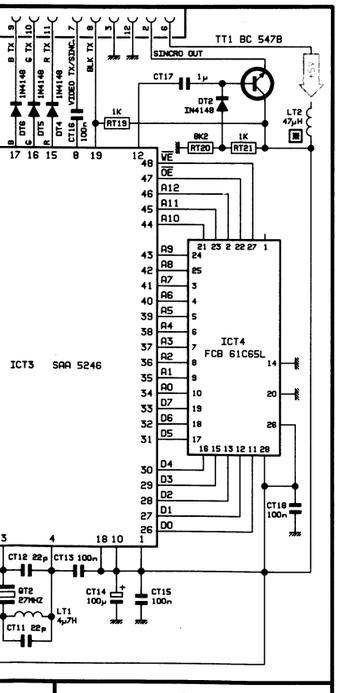

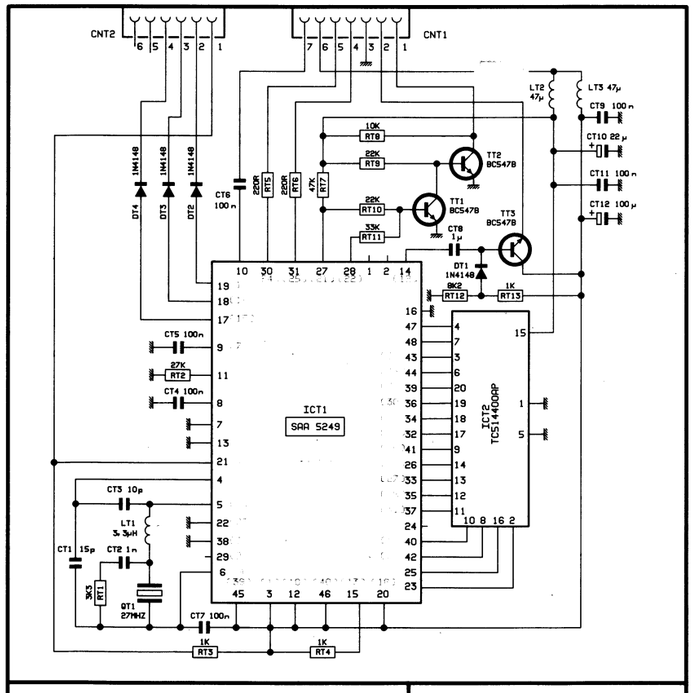

TLV 4100

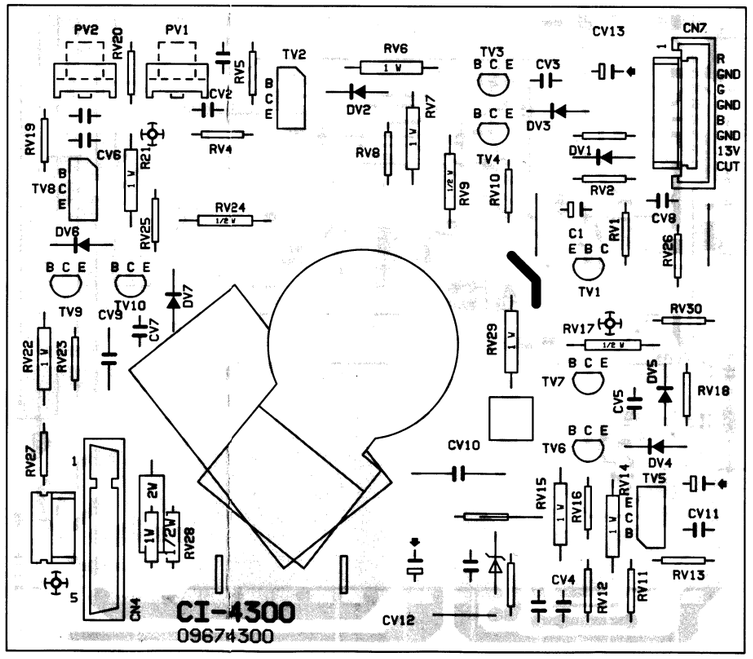

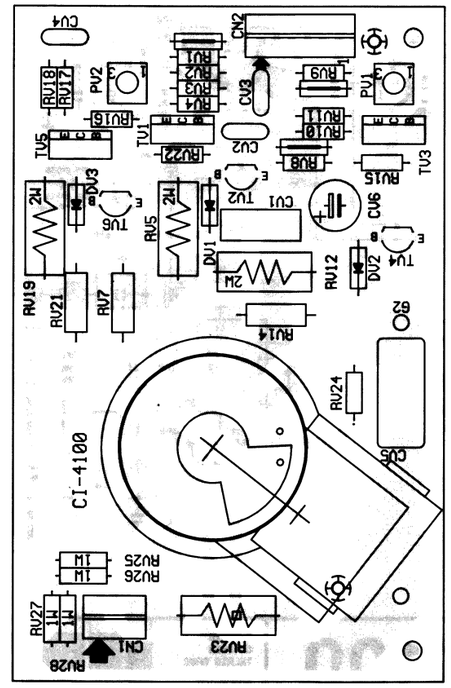

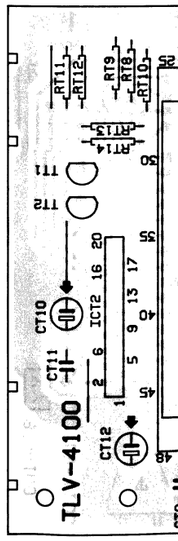

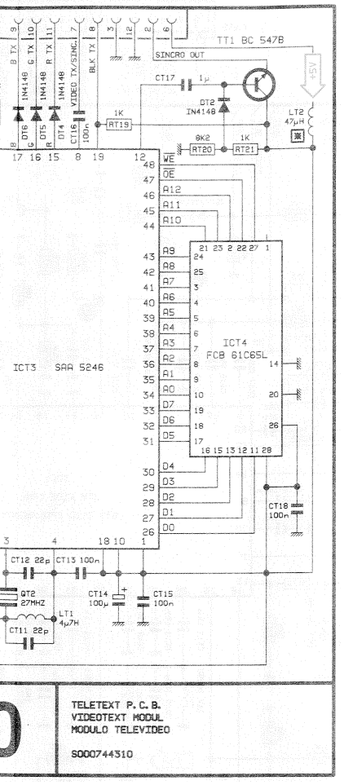

TELETEXT P.C.B.
VIDEOTEXT MODUL
MODULO TELEVIDEO

S000744310

AM 4300

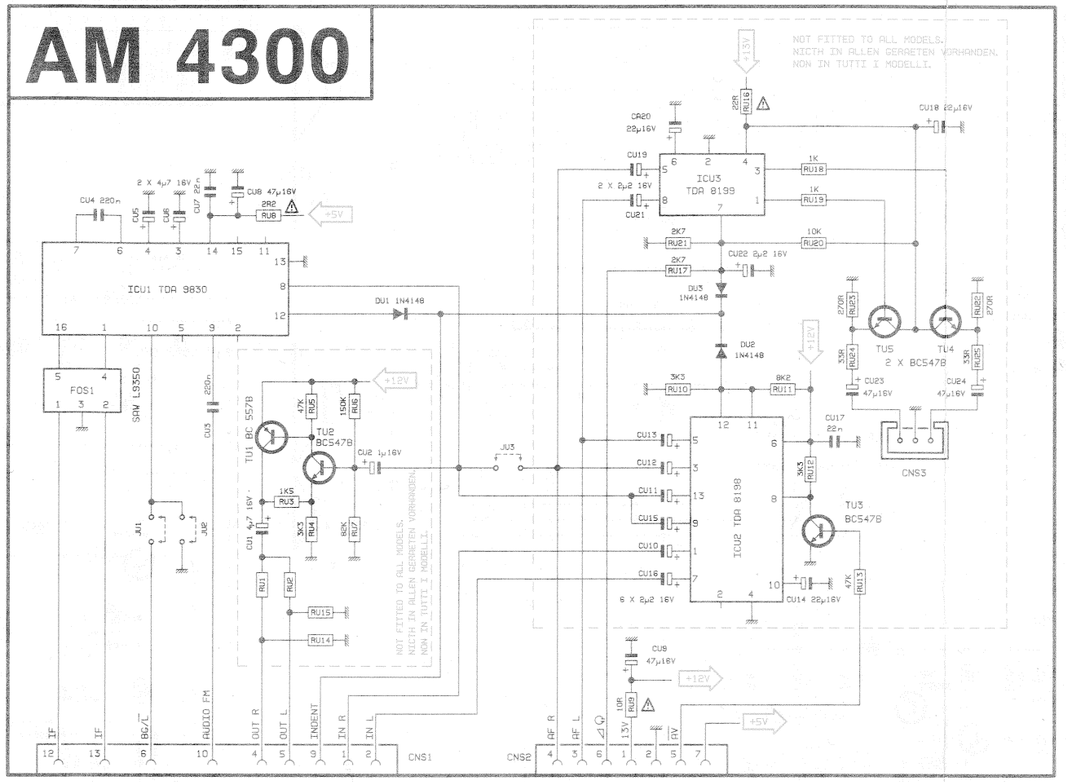

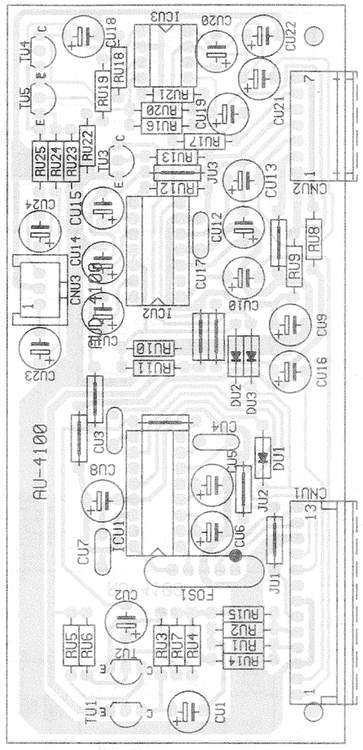

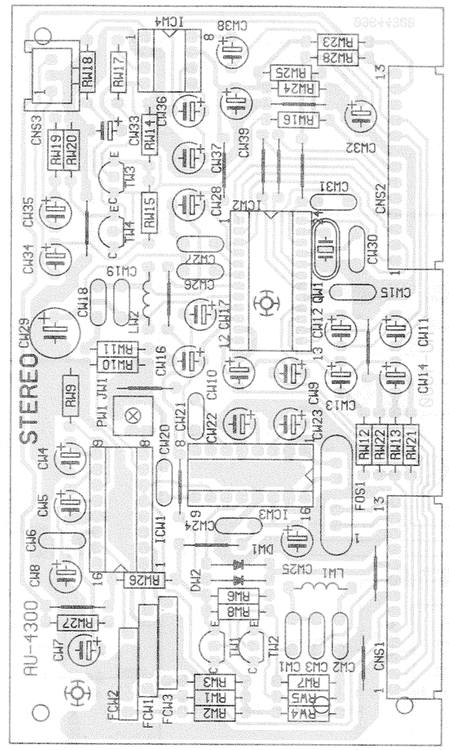

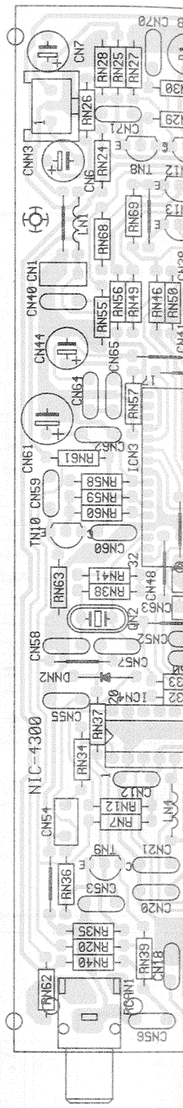

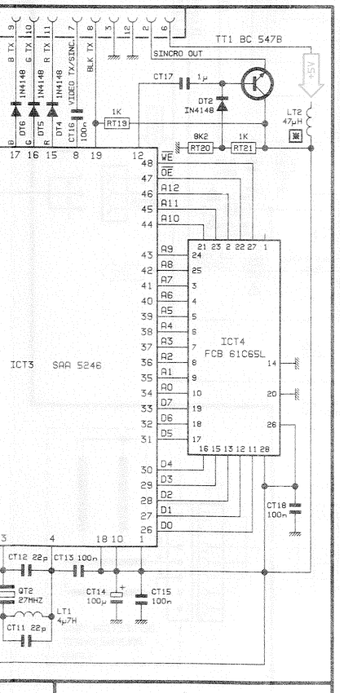

TELETEXT P.C.B.
VIDEOTEXT MODUL
MODULO TELEVIDEO

S000744320

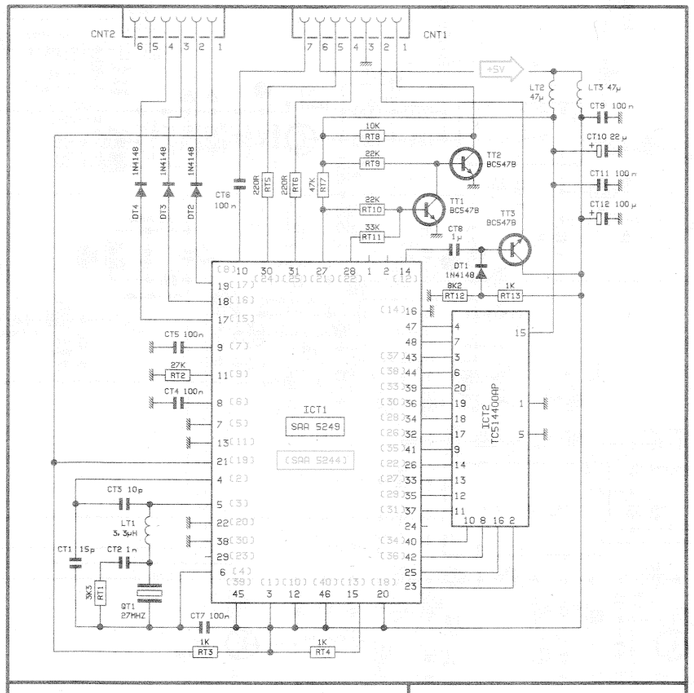

TLV 4100

TELETEXT P.C.B.
VIDEOTEXT MODUL
TELETEXT P.C.B.

S000744100

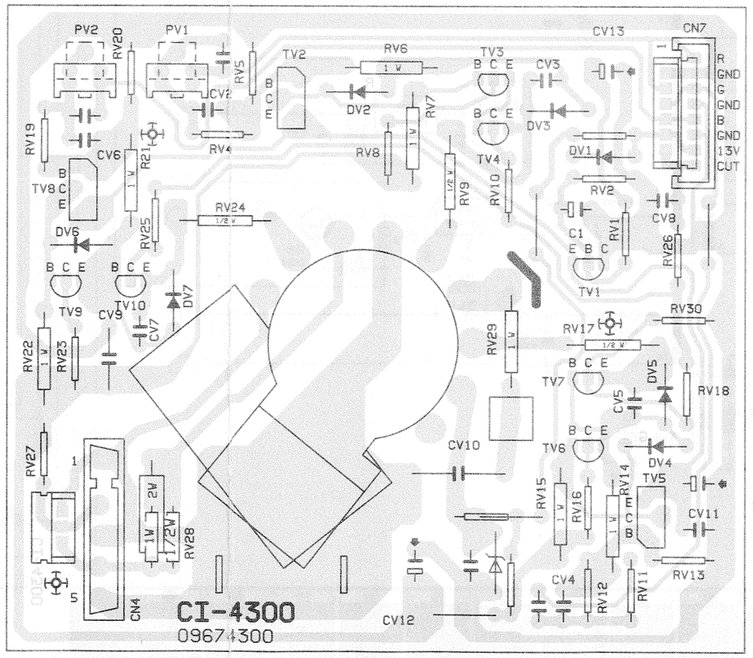

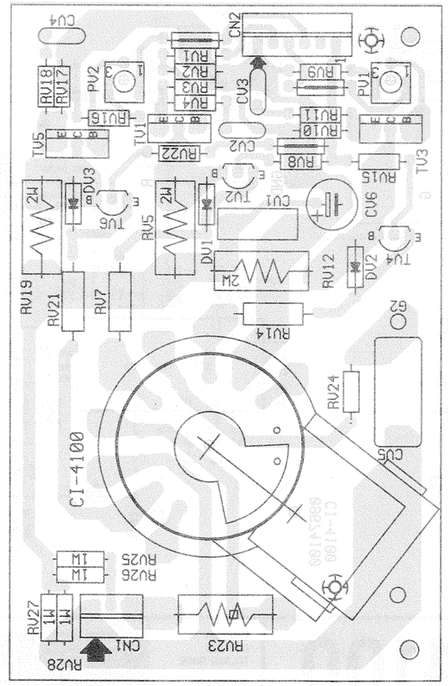

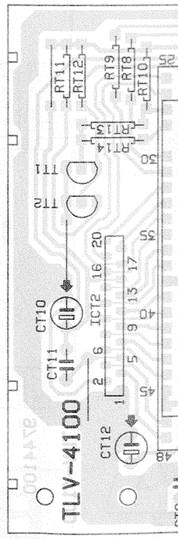

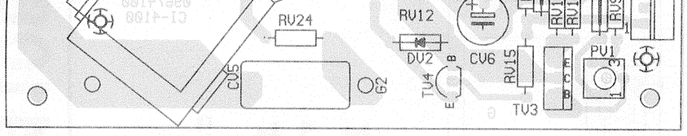
RV24
RV12
DV2
CV6
RV15
PV1
TV4
TV3
CV5
G2

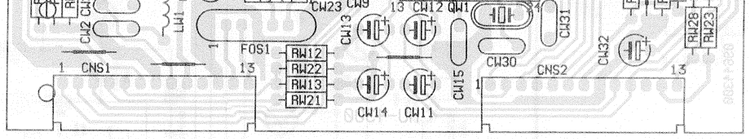
CW23
CW13
CW12
CW1
CW31
CW32
RW26
RW23
FOS1
RW12
RW22
RW13
RW21
CW30
CW15
CW14
CW11
CNS1
CNS2

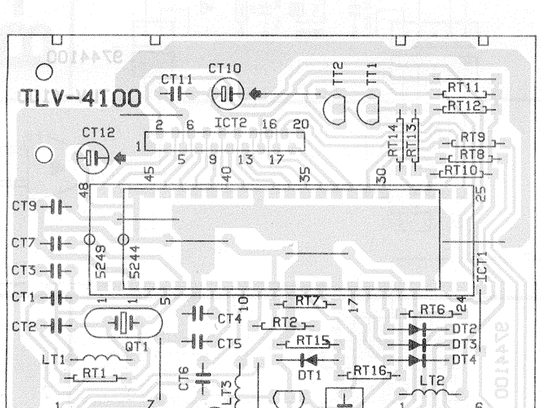
TLV-4100
CT11
CT10
TT2
TT1
RT11
RT12
CT12
ICT2
RT14
RT13
RT9
RT8
RT10
CT9
CT7
CT3
CT1
CT2
5249
5244
ICT1
CT4
CT5
RT7
RT6
RT2
RT15
DT2
DT3
DT4
QT1
LT1
RT1
CT6
LT3
DT1
RT16
LT2
TT3
CT8
CNT2
CNT1

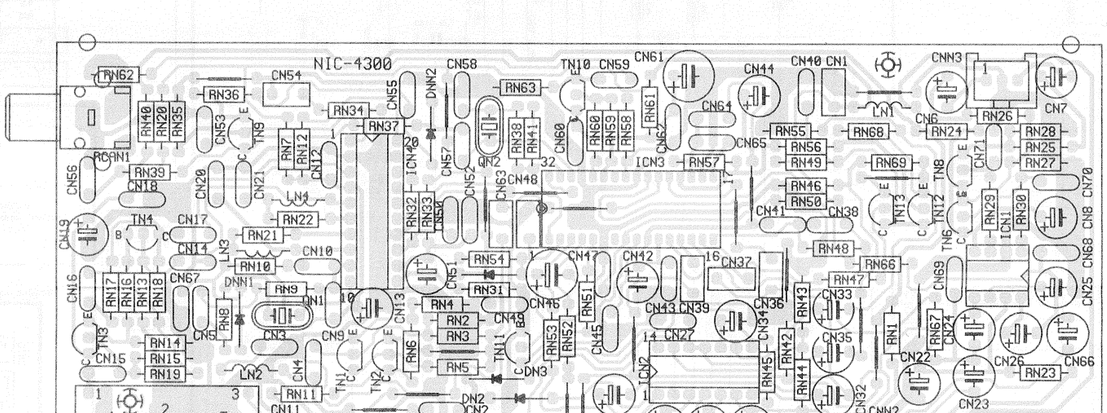
NIC-4300
RN62
CN54
RN36
RN34
RN37
CN55
RN63
CN58
TN10
CN59
CN61
CN44
CN40
CN1
CNN3
RCAN1
RN40
RN39
RN35
CN53
TN5
RN7
RN12
CN12
CN7
CN6
RN24
RN28
RN25
RN27
CN56
RN39
CN18
CN20
CN21
CN57
CN52
CN63
CN48
CN62
CN65
RN55
RN56
RN49
RN46
RN50
RN68
RN69
CN41
CN38
TN4
CN17
RN22
RN32
RN33
RN36
CN19
RN21
CN14
LN3
RN10
CN10
RN54
CN47
CN42
CN37
RN48
RN66
CN16
DNN1
RN9
CN1
CN13
RN4
RN31
RN17
RN16
RN13
RN18
CN67
RN8
CN3
CN9
RN2
RN3
CN49
CN46
RN53
RN52
RN51
CN45
CN34
CN36
CN43
CN39
RN47
RN43
CN33
CN35
RN1
RN67
CN24
CN22
CN26
RN23
CN66
CN25
CN68
CN70
TN3
CN15
RN14
RN15
RN19
LN2
CN4
RN6
RN5
CN5
TN1
TN2
CN2
RN42
RN45
RN44
CN32
CN23
CFN1
RN11
CN11
DN2
CNN1
CN28
CN31
CN30
CN29
RN64
RN65
CNN2

TLV-4320 TOP
CT18
ICT4
CT23
CT22
RT5
ICT1
CT14
ICT2
RT3
RT4
RT8
RT6
RT7
RT10
RT9
ICT3
DT1
RT2
CT15
CT4
CT13
CT5
RT39
RT16
RT11
CT10
CT12
RT15
RT21
RT36
GT1
CT9
QT2
RT14
RT13
LT1
CT8
RT20
RT19
TT2
CT11
RT35
DT4
DT5
DT6
RT37
RT38
LT2
DT2
RT1
CT16
CT17
TT1
CT2
CT1
CNT1
CNT2

TLV-4310 FLOF
CT18
ICT4
CT23
CT22
ICT5
CT14
ICT6
RT24
RT34
RT9
ICT3
RT25
RT26
RT27
RT28
RT38
CT15
CT13
RT39
RT11
RT12
CT20
CT10
CT12
RT15
RT21
RT36
QT3
CT9
RT14
RT13
RT22
RT30
LT1
QT2
CT8
RT20
RT19
TT2
RT31
RT32
RT23
CT11
RT35
DT4
DT5
DT6
RT37
CT19
RT29
LT2
DT2
DT3
CT16
CT17
TT1
CT21
CNT1
CNT2

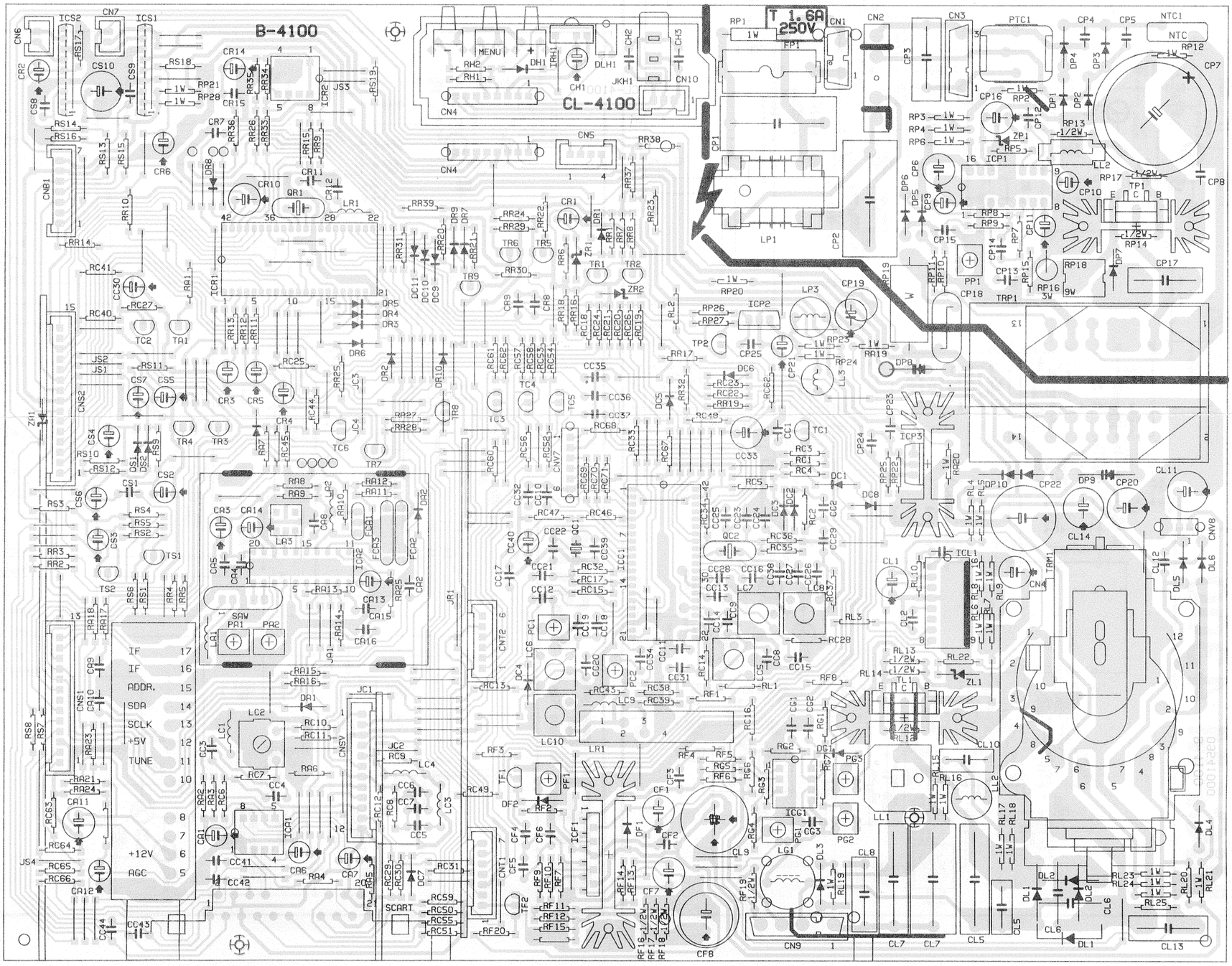
B-4100
CL-4100
T 1.6A 250V
MENU
RH2
RH1
DH1
IRH1
CH1
DLH1
CH2
CH3
JKH1
CN10
CN4
CN5
RR38
RR37
RP1
1W
FP1
CN1
CN2
CN3
PTC1
CP4
CP5
NTC1
NTC
RP12
CP7
CP3
CP16
RP2
CP12
DP1
DP2
DP3
RP3
RP4
RP6
RP5
ZP1
RP13
1/2W
ICP1
LL2
RP17
CP8
CP10
TP1
RP8
RP9
CP15
CP14
CP11
RP7
RP18
9W
RP16
3W
CP17
DP7
RP14
RP10
RP11
RP19
CP18
TRP1
RP20
ICP2
LP3
CP19
RP26
RP27
TP2
CP25
CP21
RP23
RP24
RR19
RR17
DP8
RL2
RR32
DC6
RC23
RC22
RR19
RC62
LL3
CP23
CP24
RP25
RP22
RP21
RC48
RC68
RC33
RC67
CC33
CC1
TC1
RC3
RC1
RC4
RC5
DC1
DC8
CP22
DP9
CP20
CL11
RL4
RL5
RL10
RL9
RL6
RL8
RL7
CL14
CNV8
DL6
DL5
CL12
TRM1
ICL1
CL1
CN4
QC1
QC2
RC36
RC35
RC37
RC28
RL3
RL1
RF8
RL13
RL14
RL22
ZL1
TL1
RL11
RL12
CL10
PG3
PG1
PG2
RG1
RG2
RG3
RG4
RG5
RG6
RG7
RG8
RF4
RF5
RF6
RF3
CF3
CF1
CF2
CG1
CG2
CG3
ICG1
LG1
DL3
CL8
LL1
RL16
RL15
RL17
RL18
CL9
CL7
CL5
CL6
DL1
DL2
RL23
RL24
RL25
RL20
RL21
CL13
CN9
CF8
CF7
RF19
RF16
RF17
RF18
RF14
RF13
RF11
RF12
RF15
RF10
RF9
RF7
RF20
TF2
CF5
CF6
CNT1
DF1
DF2
RF2
PF1
TF1
LR1
ICF1
LC10
LC9
LC8
LC7
LC6
LC5
LC4
LC3
LC2
LC1
RC39
RC38
RC43
RC42
RC41
RC40
RC27
RC25
RC24
RC21
RC20
RC26
RC19
RC18
RC16
RC61
RC62
RC57
RC58
RC53
RC54
RC56
RC52
RC69
RC70
RC71
RC60
RC55
RC66
RC64
RC65
RC63
RC59
RC50
RC51
RC49
RC31
RC30
RC29
RC12
RC11
RC10
RC9
RC8
RC7
RC6
RC5
RC4
RC3
RC2
RC1
CC44
CC43
CC42
CC41
CC40
CC39
CC38
CC37
CC36
CC35
CC34
CC32
CC31
CC30
CC29
CC28
CC27
CC26
CC25
CC24
CC23
CC22
CC21
CC20
CC19
CC18
CC17
CC16
CC15
CC14
CC13
CC12
CC11
CC10
CC9
CC8
CC7
CC6
CC5
CC4
CC3
CC2
CC1
RA25
RA24
RA23
RA22
RA21
RA20
RA19
RA18
RA17
RA16
RA15
RA14
RA13
RA12
RA11
RA10
RA9
RA8
RA7
RA6
RA5
RA4
RA3
RA2
RA1
RS8
RS7
RS6
RS5
RS4
RS3
RS2
RS1
RR3
RR2
RR1
CA15
CA14
CA13
CA12
CA11
CA10
CA9
CA8
CA7
CA6
CA5
CA4
CA3
CA2
CA1
LA3
LA2
LA1
SAW
PA1
PA2
FCA3
FCA2
FCA1
IF 17
IF 16
ADDR. 15
SDA 14
SCLK 13
+5V 12
TUNE 11
10
+12V 9
AGC 8
7
6
5
SCART
JA1
JC1
JC2
JC3
JC4
JR1
CNSV
CNS1
CNS2
CNS3
CNS4
CNS5
CNS6
CNS7
CNS8
CNS9
CNS10
CNS11
CNS12
CNS13
CNS14
CNS15
CNS16
CNS17
CNS18
CNS19
CNB1
CNB2
CNB3
CNB4
CNB5
CNB6
CNB7
CNB8
CNB9
CNB10
CNB11
CNB12
CNB13
CNB14
CNB15
CNB16
CNB17
CNB18
CNB19
CNB20
CNB21
CNB22
CNB23
CNB24
CNB25
CNB26
CNB27
CNB28
CNB29
CNB30
CNB31
CNB32
CNB33
CNB34
CNB35
CNB36
CNB37
CNB38
CNB39
CNB40
CNB41
CNB42
CNB43
CNB44
CNB45
CNB46
CNB47
CNB48
CNB49
CNB50
CNB51
CNB52
CNB53
CNB54
CNB55
CNB56
CNB57
CNB58
CNB59
CNB60
CNB61
CNB62
CNB63
CNB64
CNB65
CNB66
CNB67
CNB68
CNB69
CNB70
CNB71
CNB72
CNB73
CNB74
CNB75
CNB76
CNB77
CNB78
CNB79
CNB80
CNB81
CNB82
CNB83
CNB84
CNB85
CNB86
CNB87
CNB88
CNB89
CNB90
CNB91
CNB92
CNB93
CNB94
CNB95
CNB96
CNB97
CNB98
CNB99
CNB100
CNB101
CNB102
CNB103
CNB104
CNB105
CNB106
CNB107
CNB108
CNB109
CNB110
CNB111
CNB112
CNB113
CNB114
CNB115
CNB116
CNB117
CNB118
CNB119
CNB120
CNB121
CNB122
CNB123
CNB124
CNB125
CNB126
CNB127
CNB128
CNB129
CNB130
CNB131
CNB132
CNB133
CNB134
CNB135
CNB136
CNB137
CNB138
CNB139
CNB140
CNB141
CNB142
CNB143
CNB144
CNB145
CNB146
CNB147
CNB148
CNB149
CNB150
CNB151
CNB152
CNB153
CNB154
CNB155
CNB156
CNB157
CNB158
CNB159
CNB160
CNB161
CNB162
CNB163
CNB164
CNB165
CNB166
CNB167
CNB168
CNB169
CNB170
CNB171
CNB172
CNB173
CNB174
CNB175
CNB176
CNB177
CNB178
CNB179
CNB180
CNB181
CNB182
CNB183
CNB184
CNB185
CNB186
CNB187
CNB188
CNB189
CNB190
CNB191
CNB192
CNB193
CNB194
CNB195
CNB196
CNB197
CNB198
CNB199
CNB200
CNB201
CNB202
CNB203
CNB204
CNB205
CNB206
CNB207
CNB208
CNB209
CNB210
CNB211
CNB212
CNB213
CNB214
CNB215
CNB216
CNB217
CNB218
CNB219
CNB220
CNB221
CNB222
CNB223
CNB224
CNB225
CNB226
CNB227
CNB228
CNB229
CNB230
CNB231
CNB232
CNB233
CNB234
CNB235
CNB236
CNB237
CNB238
CNB239
CNB240
CNB241
CNB242
CNB243
CNB244
CNB245
CNB246
CNB247
CNB248
CNB249
CNB250
CNB251
CNB252
CNB253
CNB254
CNB255
CNB256
CNB257
CNB258
CNB259
CNB260
CNB261
CNB262
CNB263
CNB264
CNB265
CNB266
CNB267
CNB268
CNB269
CNB270
CNB271
CNB272
CNB273
CNB274
CNB275
CNB276
CNB277
CNB278
CNB279
CNB280
CNB281
CNB282
CNB283
CNB284
CNB285
CNB286
CNB287
CNB288
CNB289
CNB290
CNB291
CNB292
CNB293
CNB294
CNB295
CNB296
CNB297
CNB298
CNB299
CNB300
CNB301
CNB302
CNB303
CNB304
CNB305
CNB306
CNB307
CNB308
CNB309
CNB310
CNB311
CNB312
CNB313
CNB314
CNB315
CNB316
CNB317
CNB318
CNB319
CNB320
CNB321
CNB322
CNB323
CNB324
CNB325
CNB326
CNB327
CNB328
CNB329
CNB330
CNB331
CNB332
CNB333
CNB334
CNB335
CNB336
CNB337
CNB338
CNB339
CNB340
CNB341
CNB342
CNB343
CNB344
CNB345
CNB346
CNB347
CNB348
CNB349
CNB350
CNB351
CNB352
CNB353
CNB354
CNB355
CNB356
CNB357
CNB358
CNB359
CNB360
CNB361
CNB362
CNB363
CNB364
CNB365
CNB366
CNB367
CNB368
CNB369
CNB370
CNB371
CNB372
CNB373
CNB374
CNB375
CNB376
CNB377
CNB378
CNB379
CNB380
CNB381
CNB382
CNB383
CNB384
CNB385
CNB386
CNB387
CNB388
CNB389
CNB390
CNB391
CNB392
CNB393
CNB394
CNB395
CNB396
CNB397
CNB398
CNB399
CNB400
CNB401
CNB402
CNB403
CNB404
CNB405
CNB406
CNB407
CNB408
CNB409
CNB410
CNB411
CNB412
CNB413
CNB414
CNB415
CNB416
CNB417
CNB418
CNB419
CNB420
CNB421
CNB422
CNB423
CNB424
CNB425
CNB426
CNB427
CNB428
CNB429
CNB430
CNB431
CNB432
CNB433
CNB434
CNB435
CNB436
CNB437
CNB438
CNB439
CNB440
CNB441
CNB442
CNB443
CNB444
CNB445
CNB446
CNB447
CNB448
CNB449
CNB450
CNB451
CNB452
CNB453
CNB454
CNB455
CNB456
CNB457
CNB458
CNB459
CNB460
CNB461
CNB462
CNB463
CNB464
CNB465
CNB466
CNB467
CNB468
CNB469
CNB470
CNB471
CNB472
CNB473
CNB474
CNB475
CNB476
CNB477
CNB478
CNB479
CNB480
CNB481
CNB482
CNB483
CNB484
CNB485
CNB486
CNB487
CNB488
CNB489
CNB490
CNB491
CNB492
CNB493
CNB494
CNB495
CNB496
CNB497
CNB498
CNB499
CNB500
CNB501
CNB502
CNB503
CNB504
CNB505
CNB506
CNB507
CNB508
CNB509
CNB510
CNB511
CNB512
CNB513
CNB514
CNB515
CNB516
CNB517
CNB518
CNB519
CNB520
CNB521
CNB522
CNB523
CNB524
CNB525
CNB526
CNB527
CNB528
CNB529
CNB530
CNB531
CNB532
CNB533
CNB534
CNB535
CNB536
CNB537
CNB538
CNB539
CNB540
CNB541
CNB542
CNB543
CNB544
CNB545
CNB546
CNB547
CNB548
CNB549
CNB550
CNB551
CNB552
CNB553
CNB554
CNB555
CNB556
CNB557
CNB558
CNB559
CNB560
CNB561
CNB562
CNB563
CNB564
CNB565
CNB566
CNB567
CNB568
CNB569
CNB570
CNB571
CNB572
CNB573
CNB574
CNB575
CNB576
CNB577
CNB578
CNB579
CNB580
CNB581
CNB582
CNB583
CNB584
CNB585
CNB586
CNB587
CNB588
CNB589
CNB590
CNB591
CNB592
CNB593
CNB594
CNB595
CNB596
CNB597
CNB598
CNB599
CNB600
CNB601
CNB602
CNB603
CNB604
CNB605
CNB606
CNB607
CNB608
CNB609
CNB610
CNB611
CNB612
CNB613
CNB614
CNB615
CNB616
CNB617
CNB618
CNB619
CNB620
CNB621
CNB622
CNB623
CNB624
CNB625
CNB626
CNB627
CNB628
CNB629
CNB630
CNB631
CNB632
CNB633
CNB634
CNB635
CNB636
CNB637
CNB638
CNB639
CNB640
CNB641
CNB642
CNB643
CNB644
CNB645
CNB646
CNB647
CNB648
CNB649
CNB650
CNB651
CNB652
CNB653
CNB654
CNB655
CNB656
CNB657
CNB658
CNB659
CNB660
CNB661
CNB662
CNB663
CNB664
CNB665
CNB666
CNB667
CNB668
CNB669
CNB670
CNB671
CNB672
CNB673
CNB674
CNB675
CNB676
CNB677
CNB678
CNB679
CNB680
CNB681
CNB682
CNB683
CNB684
CNB685
CNB686
CNB687
CNB688
CNB689
CNB690
CNB691
CNB692
CNB693
CNB694
CNB695
CNB696
CNB697
CNB698
CNB699
CNB700
CNB701
CNB702
CNB703
CNB704
CNB705
CNB706
CNB707
CNB708
CNB709
CNB710
CNB711
CNB712
CNB713
CNB714
CNB715
CNB716
CNB717
CNB718
CNB719
CNB720
CNB721
CNB722
CNB723
CNB724
CNB725
CNB726
CNB727
CNB728
CNB729
CNB730
CNB731
CNB732
CNB733
CNB734
CNB735
CNB736
CNB737
CNB738
CNB739
CNB740
CNB741
CNB742
CNB743
CNB744
CNB745
CNB746
CNB747
CNB748
CNB749
CNB750
CNB751
CNB752
CNB753
CNB754
CNB755
CNB756
CNB757
CNB758
CNB759
CNB760
CNB761
CNB762
CNB763
CNB764
CNB765
CNB766
CNB767
CNB768
CNB769
CNB770
CNB771
CNB772
CNB773
CNB774
CNB775
CNB776
CNB777
CNB778
CNB779
CNB780
CNB781
CNB782
CNB783
CNB784
CNB785
CNB786
CNB787
CNB788
CNB789
CNB790
CNB791
CNB792
CNB793
CNB794
CNB795
CNB796
CNB797
CNB798
CNB799
CNB800
CNB801
CNB802
CNB803
CNB804
CNB805
CNB806
CNB807
CNB808
CNB809
CNB810
CNB811
CNB812
CNB813
CNB814
CNB815
CNB816
CNB817
CNB818
CNB819
CNB820
CNB821
CNB822
CNB823
CNB824
CNB825
CNB826
CNB827
CNB828
CNB829
CNB830
CNB831
CNB832
CNB833
CNB834
CNB835
CNB836
CNB837
CNB838
CNB839
CNB840
CNB841
CNB842
CNB843
CNB844
CNB845
CNB846
CNB847
CNB848
CNB849
CNB850
CNB851
CNB852
CNB853
CNB854
CNB855
CNB856
CNB857
CNB858
CNB859
CNB860
CNB861
CNB862
CNB863
CNB864
CNB865
CNB866
CNB867
CNB868
CNB869
CNB870
CNB871
CNB872
CNB873
CNB874
CNB875
CNB876
CNB877
CNB878
CNB879
CNB880
CNB881
CNB882
CNB883
CNB884
CNB885
CNB886
CNB887
CNB888
CNB889
CNB890
CNB891
CNB892
CNB893
CNB894
CNB895
CNB896
CNB897
CNB898
CNB899
CNB900
CNB901
CNB902
CNB903
CNB904
CNB905
CNB906
CNB907
CNB908
CNB909
CNB910
CNB911
CNB912
CNB913
CNB914
CNB915
CNB916
CNB917
CNB918
CNB919
CNB920
CNB921
CNB922
CNB923
CNB924
CNB925
CNB926
CNB927
CNB928
CNB929
CNB930
CNB931
CNB932
CNB933
CNB934
CNB935
CNB936
CNB937
CNB938
CNB939
CNB940
CNB941
CNB942
CNB943
CNB944
CNB945
CNB946
CNB947
CNB948
CNB949
CNB950
CNB951
CNB952
CNB953
CNB954
CNB955
CNB956
CNB957
CNB958
CNB959
CNB960
CNB961
CNB962
CNB963
CNB964
CNB965
CNB966
CNB967
CNB968
CNB969
CNB970
CNB971
CNB972
CNB973
CNB974
CNB975
CNB976
CNB977
CNB978
CNB979
CNB980
CNB981
CNB982
CNB983
CNB984
CNB985
CNB986
CNB987
CNB988
CNB989
CNB990
CNB991
CNB992
CNB993
CNB994
CNB995
CNB996
CNB997
CNB998
CNB999
CNB1000

Lista parti di ricambio
Spare parts list

Chassis 4300/110°

Pos./Ref.	Codice Part No.	Descrizione	Description	
	S000542059	**TELAIO BASE PAL IT cpl.**	**MAIN PCB PAL IT cpl.**	
	S000543209	**TELAIO BASE PAL D/NL/PL cpl.**	**MAIN PCB PAL D/NL/PL cpl.**	
	S000543459	**TELAIO BASE PAL/SECAM CH cpl.**	**MAIN PCB PAL/SECAM CH cpl.**	
	S000543559	**TELAIO BASE PAL GB cpl.**	**MAIN PCB PAL GB cpl.**	
	S000542669	**TELAIO BASE PAL/SECAM F cpl.**	**MAIN PCB PAL /SECAM F cpl.**	
	S017222009	Condensatore 2,2 nF 1000 V	Condensator 2,2 nF 1000 V	
	S020222009	Condensatore 2,2 nF 4000 V	Condensator 2,2 nF 4000 V	
	S030242209	Condensatore 220 nF 250 VAC	Condensator 220 nF 250 VAC	
	S036231109	Condensatore 11 nF 5% 1600 V	Condensator 11 nF 5% 1600 V	
	S040781509	Condensatore elettrolitico 150 uF 385 V	Elko 150 uF 385 V	
	S047004709	Resistenza sicurezza 4,7 Ohm	Fusible resistor 4,7 Ohm	
	S047015009	Resistenza sicurezza 15 Ohm	Fusible resistor 15 Ohm	
	S047018009	Resistenza sicurezza 18 Ohm	Fusible resistor 18 Ohm	
	S048002209	Resistenza sicurezza 2,2 Ohm	Fusible resistor 2,2 Ohm	
	S053051009	Resistenza 1MOhm VR37	Safety resistor 1 MOhm VR37	
	S053210709	Resistenza 4M7 Ohm VR68	Safety resistor 4M7 Ohm VR68	
	S054000279	Resistenza a filo 0,27 Ohm 3 W	Wire wound resistor 0,27 Ohm 3 W	
	S055491009	Resistenza a filo 1KOhm 9 W	Wire wound resistor 1 KOhm 9 W	
	S056590209	Resistenza NTC 4,7 Ohm	NTC resistor 4,7 Ohm	
	S056591109	Resistenza PTC 6A	PTC resistor 6 A	
	S061284619	Diodo BA 159	Diode BA 159	
	S061303209	Diodo BYW 96D	Diode BYW 96 D	
	S061316879	Diodo BY 228	Diode BY228	
	S061401339	Diodo BYD 33 J	Diode BYD 33 J	
	S061401509	Diodo BZV 86-1V4 143	Diode BZV 86-1V4 143	
	S061961079	Diodo zener ZPD 3,6 V	Zener diode ZPD 3,6 V	
	S061961409	Diodo zener ZPD 5,1,V	Zener diode ZPD 5,1 V	
	S061962019	Diodo zener ZPD 12 V	Zener diode ZPD 12 V	
	S061962059	Diodo zener ZPD 13 V	Zener diode ZPD 13 V	
	S061963019	Diodo zener ZPD 33 V	Zener diode 33 V	
	S062000409	Diodo LED rosso/verde	LED diode red/green	
	S062520349	Transistor BC 640	Transistor BC 640	
	S062756109	Transistor S2000AF	Transistor S2000AF	
	S063162009	Circuito integrato TEA 2014-A	IC TEA 2014-A	
	S063164509	Circuito integrato TEA 2261	IC TEA 2261	
	S063170569	Circuito integrato TDA 7056A	IC TDA 7056A	
	S063181409	Circuito integrato TDA 8140	IC TDA 8140	

Pos./Ref.	Codice Part No.	Descrizione	Description	
	S063221029	Circuito integrato STV 2102 (PAL)	IC STV 2102 (PAL)	
	S063221109	Circuito integrato STV 2110 (PAL/SECAM)	IC STV 2110 (PAL/SECAM)	
	S063181459	Circuito Integrato TDA8145	IC TDA 8145	
	S063184889	Circuito integrato 84C841P/108-SEI4300	IC 84C841P/108-SEI4300	
	S063185719	Circuito integrato ST 24C02	IC ST 24C02	
	S063193039	Circuito integrato TDA 8174W	IC TDA 8174W	
	S063198009	Circuito integrato TDA 9800 (I-GB)	IC TDA 9800 (I-GB)	
	S063198029	Circuito integrato TDA 9802 (F)	IC TDA 9802 (F)	
	S063198039	Circuito integrato TDA 9803 (CH-D-NL-PL)	IC TDA 9803 (CH-D-NL-PL)	
	S063309859	Circuito integrato UA 7809	IC UA 7809	
	S065621109	Trasformatore EAT 110°	Flyback transformer 110°	
	S065625609	Cavo EAT	EHT Cable	
	S065625709	Cavo fuoco	Focus Cable	
	S065625809	Cavo G2	G2 Cable	
	S065704309	Trasformatore Switch	Switch transformer	
	S066541709	Filtro rete (I-GB)	Line filter (I-GB)	
	S066542009	Filtro rete (CE)	Line filter (CE)	
	S066842009	Linea ritardo croma DL711	Chroma delay line DL711	
	S066843009	Linea ritardo Y	Y delay line	
	S066900009	Quarzo 4,43 MHz	Quarz 4,43,MHz	
	S066900409	Quarzo 10 MHz	Quarz 10 MHz	
	S067071009	Bobina E/W	E/W coil	
	S067081409	Bobina linearità	Linearity coil	
	S067316009	Filtro SAW G 1984 M	SAW filter G 1984 M	
	S067317009	Filtro SAW J 1952 (F-GB)	SAW filter J 1952 (F-GB)	
	S067330109	Risuonatore CSB 503F12	Ceramic oscillator CSB 503F12	
	S067400529	Filtro ceramico SFT 5,5 MA (BG)	Ceramic filter SFT 5,5 MA (BG)	
	S067401089	Filtro ceramico SFT 6,0 MA (I)	Ceramic filter SFT 6,0 MA (I)	
	S067401109	Filtro ceramico SFT 6,5 MA (DK)	Ceramic filter SFT 6,5 MA (DK)	
	S067401059	Filtro ceramico TPS 5,5 MWA	Ceramic filter TPS 5,5 MWA	
	S067400009	Filtro ceramico TPWA01B (F-GB)	Ceramic filter TPWA 01B (F-GB)	
	S067407609	Bobina	Coil	
	S067407809	Bobina	Coil	
	S068056309	Tasto EKPT 1105S	Push switch EKPT 1105S	
	S068149109	Ricevitore IR TFMS 5360	IR Receiver TFMS 5360	
	S069024009	Tuner UV 914/IEC (GB-I)	Tuner UV 914/IEC (GB-I)	
	S069024309	Tuner UV 916/IEC (CH-D-F-NL-PL)	Tuner UV 916/IEC (CH-D-F-NL-PL)	
	S070505019	Fusibile 1,6 A T 250 V	Fuse 1,6 A T 250 V	
	S071015209	Presa cuffia mono	Earphone jack mono	
	S071015309	Presa cuffia stereo	Earphone Jack stereo	
	S092503709	Cavo rete cpl. (CE)	Line power cable cpl. (CE)	
	S092503809	Cavo rete cpl. (GB)	Line power cable cpl. (GB)	

Pos./Ref.	Codice Part No.	Descrizione	Description	
	S000644309	**MODULO STEREO BG cpl.**	**STEREO PCB BG cpl.**	
	S000644319	**MODULO STEREO BG/DK cpl.**	**STEREO PCB BG/DK cpl.**	
	S000644329	**MODULO STEREO BG/L cpl.**	**STEREO PCB BG/L cpl.**	
	S014118009	Condensatore 180 pF NP0 5%	Condensator 180 pF NP0 5%	
	S029721809	Condensatore 1,8 nF KS424G63 2%	Condensator 1,8 nF KS424G63 2%	
	S063181999	Circuito integrato TDA 8199	IC TDA 8199	
	S063198219	Circuito integrato TDA 9821	IC TDA 9821	
	S063198209	Circuito integrato TDA 9820 (BG/DK)	IC TDA 9820 (BG/DK)	
	S063198309	Circuito integrato TDA 9830 (solo AM)	IC TDA 9830 (AM only)	
	S063198479	Circuito integrato TDA 9847	IC TDA 9847	
	S066900409	Quarzo 10 MHz	Quarz 10 MHz	
	S067320009	Filtro SAW L9350M (solo AM)	SAW filter L9350M (AM only)	
	S067400529	Filtro ceramico SFT 5,5 MA	Ceramic filter SFT 5,5 MA	
	S067400539	Filtro ceramico SFT 5,74 MA	Ceramic filter SFT 5,74 MA	
	S067401109	Filtro ceramico SFT 6,5 MA (solo DK)	Ceramic filter SFT 6,5 MA (DK only)	
	S067430009	Choke 4,7 mH 2%	Choke 4,7 mH 2%	
	S000634319	**MODULO NICAM 4300 cpl. (SYS I)**	**NICAM PCB 4300 cpl. (SYS I)**	
	S000634309	**MODULO NICAM 4300 cpl. (SYS BG)**	**NICAM PCB 4300 cpl (SYS BG)**	
	S047010009	Resistenza di sicurezza 10 Ohm	Fusible resistor 10 Ohm	
	S048002209	Resistenza di sicurezza 2,2 Ohm	Fusible resistor 2,2 Ohm	
	S061296509	Diodo BB 405B 153	Diode BB 405B 153	
	S061298009	Diodo BB 809 153	Diode BB 809 153	
	S062720009	Transistor BF 240	Transistor BF 240	
	S063181989	Circuito integrato TDA 8198	IC TDA 8198	
	S063181999	Circuito integrato TDA 8199	IC TDA 8199	
	S063187329	Circuito integrato TDA 8732	IC TDA 8732	
	S063372829	Circuito integrato SAA 7282	IC SAA 7282	
	S066900359	Quarzo 8,192 MHz	Quarz 8,192 MHz	
	S066900439	Quarzo 13,1 MHz (SYS I)	Quarz 13,1 MHz (SYS I)	
	S066900429	Quarzo 11,7 MHz (SYS BG)	Quarz 11,7 MHz (SYS BG)	
	S067336009	Filtro 6,55 MHz (SYS I)	Filter 6,55 MHz (SYS I)	
	S067335009	Filtro 5,85 MHz (SYS BG)	Filter 5,85 MHz (SYS BG)	
	S071020209	Presa Cinch LPR 6520-0805	Cinch jack LPR 6520-0805	
	S000604209	**MODULO AM/FM (SCART STEREO)**	**AM/FM PCB (SCART STEREO)**	
	S047010009	Resistenza sicurezza 10 Ohm	Fusible resistor 10 Ohm	
	S048002209	Resistenza sicurezza 2,2 Ohm	Fusible resistor 2,2 Ohm	
	S063181989	Circuito integrato TDA 8198	IC TDA 8198	
	S063181999	Circuito integrato TDA 8199	IC TDA 8199	
	S063198309	Circuito integrato TDA 9830	IC TDA 9830	
	S067320009	Filtro SAW L9350M	SAW Filter L9350M	

Pos./Ref.	Codice Part No.	Descrizione	Description	
	S000744329	**MODULO TEXT 4300 cpl. (TOP)**	**TEXT PCB 4300 cpl. (TOP)**	
	S000744349	**MODULO TEXT 4300 cpl. (FLOF)**	**TEXT PCB 4300 cpl. (FLOF)**	
	S000744319	**MODULO TEXT 4300 cpl. (4 pagine)**	**TEXT PCB 4300 cpl. (4 pages)**	
	S000744339	**MODULO TEXT 4300 cpl. (4 pag. PL)**	**TEXT PCB 4300 cpl. (4 pages Poland)**	
	S000744109	**MODULO TEXT 4100 cpl. (1 pagina)**	**TEXT PCB 4100 cpl. (1 page)**	
	S000744309	**MODULO TEXT 4300 cpl. (512 pagine)**	**TEXT PCB 4300 cpl. (512 pages)**	
	S063185719	Circuito integrato ST 24C02 (TOP/FLOF)	IC ST 24C02 (TOP/FLOF)	
	S063283659	Circuito integrato PCB 83C654P/A (TOP)	IC PCB 83C654P/A (TOP)	
	S063284819	Circuito integrato PCF 84C81P/049 (FLOF)	IC PCF 84C81P/049 (FLOF)	
	S063352469	Circuito integrato SAA5246P/E/M4 (4 pag.)	IC SAA5246P/E/M4 (4 pages)	
	S063352479	Circuito integrato SAA5246P/H/M4 (Poland)	IC SAA5246P/H/M4 (Poland)	
	S063352449	Circuito integrato SAA5244 AP/A (1 pag.)	IC SAA5244 AP/A (1 page)	
	S063352499	Circuito integrato SAA5249 (512 pagine)	IC SAA5249 (512 pages)	
	S063355659	Circuito Integrato FCB 61C65L-70P (4 pag.)	IC FCB 61C65L-70P (4 pages)	
	S063351449	Circuito integrato TC 514400 AZ (512 pag.)	IC TC514400 AZ (512 pages)	
	S066901209	Quarzo 12 MHz (TOP)	Quarz 12 MHz (TOP)	
	S066900909	Quarzo 9,83 MHz (FLOF)	Quarz 9,83 MHz (FLOF)	
	S066902709	Quarzo 27 MHz	Quarz 27 MHz	
	S067417009	Choke 3,3 uH	Choke 3,3 uH	
	S067417059	Choke 4,7 uH	Choke 4,7 uH	
	S000674309	**MODULO ZOCCOLO CINESCOPIO cpl.**	**CRT PCB cpl.**	
	S062740869	Transistor BF871	Transistor BF 871	
	S062734209	Transistor BF420	Transistor BF 420	
	S062734219	Transistor BF421	Transistor BF 421	
	S070001209	Zoccolo cinescopio	CRT socket	

Lista parti di ricambio
Spare parts list

TORUS 730 VT
COLOR 7400 TRC
Chassis Professional 4300/110°

Pos./Ref.	Codice Part No.	Descrizione	Description	
	S000844319	**Comando locale cpl.**	**Manuals controls PCB cpl.**	
	S068055309	Interruttore rete	Mains switch	
	S079049409	Sportellino	Door	
	S082810409	Filtro IR	IR Filter	
	S083305009	Tasto interruttore rete	Mains switch button	
	S091041609	Molla tasto interruttore rete	Mains switch spring	
	S073170659	Altoparlante tweeter	Tweeter	
	S073170909	Altoparlante 80x160 16 Ohm	Speaker 80x160 16 Ohm	
	S060328019	Cinescopio A66EAK71X01	CRT A66EAK71X01	
	S067202119	Bobina smagnetizzazione	Degauss coil	
	S080154009	Schienale	Back cover	
	S087121009	Staffa supporto telaio anteriore	Chassis guide front	
	S087121309	Staffa supporto telaio	Chassis guide	
	S068243009	Telecomando 4300 ORION	Transmitter 4300 ORION	
	S007865419	Mobile frontale cpl.	Cabinet front cpl.	
	S078154009	Mobile parte centrale cpl.	Cabinet central part cpl.	

Lista parti di ricambio
Spare parts list

TRIADE 3400
COLOR 8800 TRC
Chassis Professional 4300/110°

Pos./Ref.	Codice Part No.	Descrizione	Description	
	S000864309	**Modulo audio Booster cpl.**	**Audio booster PCB cpl.**	
	S000844309	**Comando locale cpl.**	**Manuals controls PCB col.**	
	S068055309	Interruttore rete	Mains switch	
	S079041509	Sportellino	Door	
	S083304200	Tasto interruttore rete	Mains switch button	
	S091041709	Molla interruttore	Mains switch spring	
	S073170659	Altoparlante tweeter	Tweeter	
	S073172309	Altoparlante 60x160 16 Ohm	Speaker 60x160 16 Ohm	
	S060334109	Cinescopio A79ECU33X01	CRT A79ECU33X01	
	S067203319	Bobina smagnetizzazione	Degauss coil	
	S079471009	Vetro	Front glass	
	S080143009	Schienale	Back cover	
	S082808709	Fissaggio vetro dx	Glass clamp right	
	S082808809	Fissaggio vetro sx	Glass clamp left	
	S087121009	Staffa supporto telaio anteriore	Chassis guide front	
	S087121309	Staffa supporto telaio	Chassis guide	
	S068243009	Telecomando 4300 ORION	Transmitter 4300 ORION	
	S073172119	Altoparlante woofer	Woofer	
	S078171109	Box subwoofer	Subwoofer box	
	S007867109	Mobile frontale cpl.	Cabinet front cpl.	
	S078171009	Mobile parte centrale cpl.	Cabinet central part cpl.	